OPERATION AND PARTS MANUAL

MULTIQUIP®

WHITEMAN SERIES
WALK-BEHIND TROWEL

B-46 SERIES

9 HP, 11 HP, 11 HP HIGH SPEED
HONDA GASOLINE ENGINE
9 HP ROBIN GASOLINE ENGINE

Revision #8 (05/08/12)

To find the latest revision of this publication, visit our website at: www.multiquip.com

THIS MANUAL MUST ACCOMPANY THE EQUIPMENT AT ALL TIMES.

P/N 22074

⚠ WARNING ⚠

CALIFORNIA — Proposition 65 Warning

Engine exhaust and some of its constituents, and some dust created by power sanding, sawing, grinding, drilling and other construction activities contains chemicals known to the State of California to cause cancer, birth defects and other reproductive harm. Some examples of these chemicals are:

- Lead from lead-based paints.
- Crystalline silica from bricks.
- Cement and other masonry products.
- Arsenic and chromium from chemically treated lumber.

Your risk from these exposures varies, depending on how often you do this type of work. To reduce your exposure to these chemicals: ALWAYS work in a well ventilated area, and work with approved safety equipment, such as dust masks that are specially designed to filter out microscopic particles.

⚠ WARNING

SILICOSIS WARNING

Grinding/cutting/drilling of masonry, concrete, metal and other materials with silica in their composition may give off dust or mists containing crystalline silica. Silica is a basic component of sand, quartz, brick clay, granite and numerous other minerals and rocks. Repeated and/or substantial inhalation of airborne crystalline silica can cause serious or fatal respiratory diseases, including silicosis. In addition, California and some other authorities have listed respirable crystalline silica as a substance known to cause cancer. When cutting such materials, always follow the respiratory precautions mentioned above.

⚠ WARNING

RESPIRATORY HAZARDS

Grinding/cutting/drilling of masonry, concrete, metal and other materials can generate dust, mists and fumes containing chemicals known to cause serious or fatal injury or illness, such as respiratory disease, cancer, birth defects or other reproductive harm. If you are unfamiliar with the risks associated with the particular process and/or material being cut or the composition of the tool being used, review the material safety data sheet and/or consult your employer, the material manufacturer/supplier, governmental agencies such as OSHA and NIOSH and other sources on hazardous materials. California and some other authorities, for instance, have published lists of substances known to cause cancer, reproductive toxicity, or other harmful effects.

Control dust, mist and fumes at the source where possible. In this regard use good work practices and follow the recommendations of the manufacturers or suppliers, OSHA/NIOSH, and occupational and trade associations. Water should be used for dust suppression when wet cutting is feasible. When the hazards from inhalation of dust, mists and fumes cannot be eliminated, the operator and any bystanders should always wear a respirator approved by NIOSH/MSHA for the materials being used.

MQ WHITEMAN B-46 Walk-Behind Trowel

Proposition 65 Warning 2
Silicosis/Respiratory Warnings 3
Table Of Contents 4
Parts Ordering Procedures 5
Dimensions 6
Specifications 7
Training Checklist 8
Daily Pre-Operation Checklist 9
Safety Information 10-14
General Information 15
Controls And Components 16-17
Basic Engine 18
Assembly and Installation 19-22
Pre-Inspection 23-24
Initial Start-Up 25-26
Operation 27-28
Options 29-30
Maintenance 31-37
Troubleshooting (Trowel) 38-39
Troubleshooting (Engine) 40
Explanation Of Codes In Remarks Column 42
Suggested Spare Parts 43

Component Drawings

Nameplate and Decals 44-45
Standard Handle Assy. (07/29/07 & Below) 46-47
Standard Handle Assy. (07/30/07 & Above) 48-49
Quick Pitch Handle Assy. (07/29/07 & Below) .. 50-53
Quick Pitch Handle Assy. (07/30/07 & Above) 54-55
Basic Unit Assembly 56-57
Gearbox Assembly 58-59
Engine Assembly 60-61
Spider Assembly 62-63
Stabilizer Ring Assembly 64-65
Blades And Pan Assembly 66-67

Terms And Conditions Of Sale — Parts 68

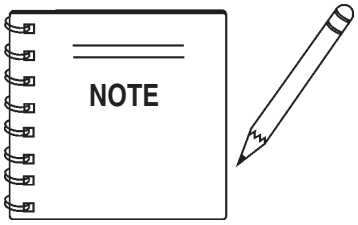

Specifications and part numbers are subject to change without notice.

www.multiquip.com

Ordering parts has never been easier!
Choose from three easy options:

Effective:
January 1st, 2006

Best Deal!

Order via Internet (Dealers Only):
Order parts on-line using Multiquip's SmartEquip website!

- View Parts Diagrams
- Order Parts
- Print Specification Information

If you have an MQ Account, to obtain a Username and Password, E-mail us at: **parts@multiquip.com.**

To obtain an MQ Account, contact your District Sales Manager for more information.

Goto www.multiquip.com and click on Order Parts to log in and save!

Use the ***internet*** and qualify for a **5% Discount** on *Standard orders* for all orders which include complete part numbers.*

Note: Discounts Are Subject To Change

Order via Fax (Dealers Only):
All customers are welcome to order parts via Fax.
Domestic (US) Customers dial:
1-800-6-PARTS-7 (800-672-7877)

Fax your order in and qualify for a **2% Discount** on *Standard orders* for all orders which include complete part numbers.*

Note: Discounts Are Subject To Change

Order via Phone: **Domestic (US) Dealers Call:**
1-800-427-1244

Non-Dealer Customers:
Contact your local Multiquip Dealer for parts or call 800-427-1244 for help in locating a dealer near you.

International Customers should contact their local Multiquip Representatives for Parts Ordering information.

When ordering parts, please supply:

- ❒ **Dealer Account Number**
- ❒ **Dealer Name and Address**
- ❒ **Shipping Address (if different than billing address)**
- ❒ **Return Fax Number**
- ❒ **Applicable Model Number**
- ❒ **Quantity, Part Number and Description of Each Part**
- ❒ **Specify Preferred Method of Shipment:**
  - ✓ UPS/Fed Ex
    - Priority One
    - Ground
    - Next Day
    - Second/Third Day
  - ✓ DHL
  - ✓ Truck

NOTICE

All orders are treated as *Standard Orders* and will ship the same day if received prior to 3PM PST.

WE ACCEPT ALL MAJOR CREDIT CARDS!

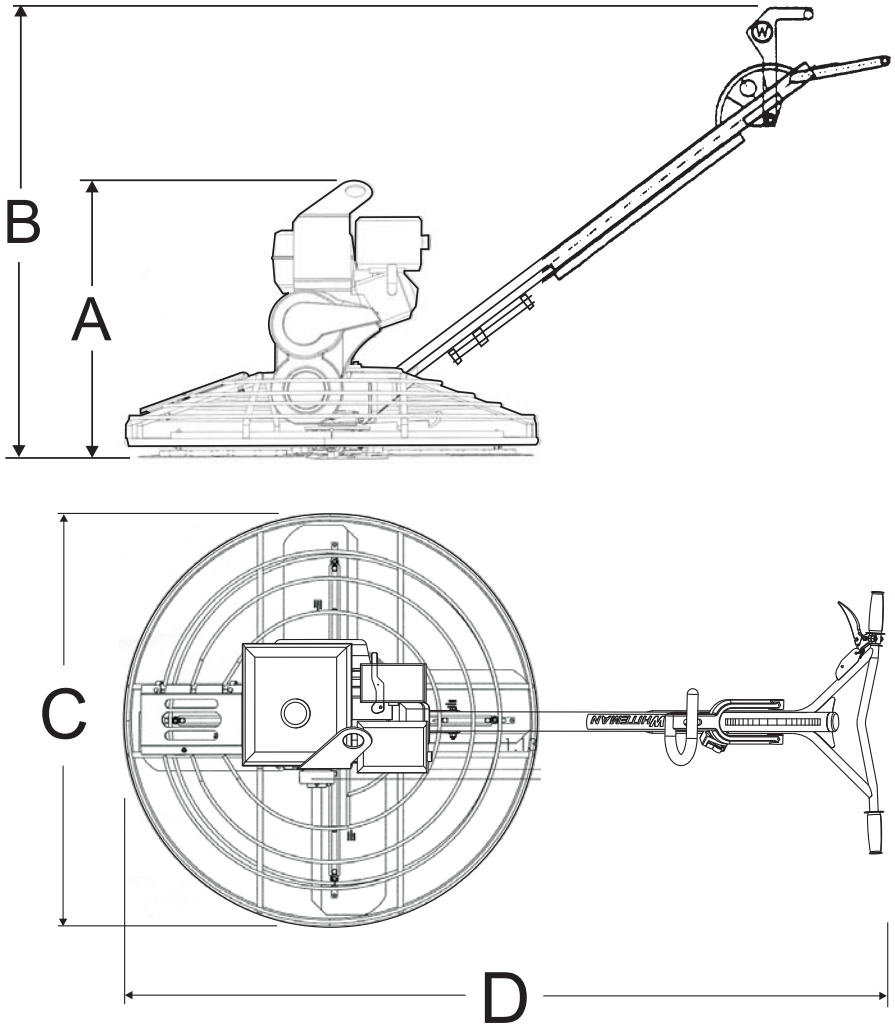

Figure 1. B-46 Trowel Dimensions

Table 1. B-46 Trowel Dimensions & Weights

	B-46	
Handle Type	Standard	Quick Pitch
A - Height (Lifting Bale)	31.5 in. (800 mm)	
B - Height (Engagement Lever)	40 in. (1016 mm)	42 in. (1067 mm)
C - Width	46.5 in. (1181 mm)	
D - Length	75.5 in. (1918 mm)	
Shipping Weight - 9 HP Honda/9 HP Robin	285 lbs (129.3 Kg)	295 lbs (133.8 Kg)
Shipping Weight - 11 HP Honda	290 lbs (131.5 Kg)	300 lbs (136.1 Kg)

Table 2. Trowel Specifications		
Model	B46H90 / B46R90 / B46H11	B46H11H
Number of Blades	4	4
Ring Diameter	46.5 in. (1181 mm)	46.5 in. (1181 mm)
Rotor Speed (RPM)	60 - 130	90 - 155
Path Width	43.5 in. (1105 mm)	43.5 in. (1105 mm)

Table 3. Noise and Vibration Emissions for Model B46H90		
Guaranteed ISO 11201:2010 Based Sound Pressure Level at Operator Station in dB(A)	Quick Pitch™ Handle	89
	Standard Handle	89
Guaranteed ISO 3744:2010 Based Sound Power Level in dB(A)	Quick Pitch™ Handle	111
	Standard Handle	111
Hand-Arm Vibration Per ISO 5349-1:2001 in m/s^2 $\sum A(8)$	Quick Pitch™ Handle	1.7
	Standard Handle	1.51

NOTES:

1. *Sound Pressure and Power Levels are "A" weighted Measures per ISO 226:2003 (ANSI S1.4-1981). They are measured with the operating condition of the machine which generates the most repeatable but highest values of the sound levels. Under normal circumstances, the sound level will vary depending on the condition of the material being worked upon.*

2. *The vibration level indicated is the vector sum of the RMS (Root Mean Square) Values of amplitudes on each axis, standardized to an 8 hour exposure period, and obtained using operating condition of the machine that generates the most repeatable but highest values in accordance with the applicable standards for the machine.*

3. *Per EU Directive 2002/44/EC, the daily exposure action value for hand/arm vibration is 2.5 m/s^2 "A(8). The daily exposure limit value is 5 m/s^2 "A(8).*

Table 4. Specifications (Engines)				
	Model	**HONDA GX270UTQA2**	**ROBIN EX-270D50020**	**HONDA GX340U1QAP2**
Engine	Type	Air-cooled 4 stroke, Single Cylinder, OHV, Horizontal Shaft Gasoline Engine	Air-cooled 4 stroke, Single Cylinder, OHV, Horizontal Shaft Gasoline Engine	Air-cooled 4 stroke, Single Cylinder, OHV, Horizontal Shaft Gasoline Engine
	Bore X Stroke	3.0 in. X 2.3 in. (77 mm x 58 mm)	2.95 in. X 2.36 in. (75 mm x 60 mm)	3.2 in. X 2.5 in. (82 mm x 64 mm)
	Displacement	270 cc	265 cc	337 cc
	Max Output	9 H.P. @ 3600 RPM	9 H.P. @ 4000 RPM	11 H.P. @ 3600 RPM
	Fuel Tank Capacity	Approx. 1.59 U.S. Gallons (6.0 Liters)	Approx. 1.59 U.S. Gallons (6.0 Liters)	Approx. 1.72 U.S. Gallons (6.5 Liters)
	Fuel	Unleaded Gasoline	Unleaded Gasoline	Unleaded Gasoline
	Lube Oil Capacity	1.06 Qt. (1.0 Liters)	1.06 Qt. (1.0 Liters)	1.06 Qt. (1.0 Liters)
	Speed Control Method	Centrifugal Fly-weight Type	Centrifugal Fly-weight Type	Centrifugal Fly-weight Type
	Starting Method	Recoil Start	Recoil Start	Recoil Start
Dimension (L x W x H)		14.0 x 16.9 X 16.1 in. (355 X 430 X 410 mm)	13.82 x 16.54 X 16.14 in. (351 X 420 X 410 mm)	16.7 x 17.7 X 17.4 in. (425 X 450 X 443 mm)
Dry Net Weight		50.7 lbs (23 Kg.)	46.3 lbs (21 Kg.)	68 lbs (29 Kg.)

TRAINING CHECKLIST

This checklist lists some of the minimum requirements for machine maintenance and operation. Please feel free to detach it and make copies. Use this checklist whenever a new operator is to be trained or it can be used as a review for more experienced operator's.

TRAINING CHECKLIST			
NO.	**DESCRIPTION**	**OK?**	**DATE**
1	Read Operator's Manual completely.		
2	Machine layout, location of components, checking of engine and gearbox fluid level.		
3	Fuel system, refueling procedure.		
4	Operation of controls (machine not running).		
5	Safety controls, clutch operation.		
6	Emergency stop procedures.		
7	Startup of machine.		
8	Maneuvering.		
9	Pitching.		
10	Concrete finishing techniques.		
11	Shutdown of machine.		
12	Lifting of machine.		
13	Machine transport and storage.		

Operator _____ Trainee _____

COMMENTS:

DAILY PRE-OPERATION CHECKLIST

DAILY PRE-OPERATION CHECKLIST		✓	✓	✓	✓	✓	✓
1	Engine Oil Level.						
2	Gearbox Fluid Level.						
3	Condition of Blades.						
4	Blade Pitch Operation.						
5	Clutch Operation.						

COMMENTS:

Do not operate or service the equipment before reading the entire manual. Safety precautions should be followed at all times when operating this equipment. Failure to read and understand the safety messages and operating instructions could result in injury to yourself and others.

SAFETY MESSAGES

The four safety messages shown below will inform you about potential hazards that could injure you or others. The safety messages specifically address the level of exposure to the operator and are preceded by one of four words: **DANGER, WARNING, CAUTION** or **NOTICE.**

SAFETY SYMBOLS

DANGER

Indicates a hazardous situation which, if not avoided, **WILL** result in **DEATH** or **SERIOUS INJURY.**

WARNING

Indicates a hazardous situation which, if not avoided, **COULD** result in **DEATH** or **SERIOUS INJURY.**

CAUTION

Indicates a hazardous situation which, if not avoided, **COULD** result in **MINOR** or **MODERATE INJURY.**

NOTICE

Addresses practices not related to personal injury.

Potential hazards associated with the operation of this equipment will be referenced with hazard symbols which may appear throughout this manual in conjunction with safety messages.

Symbol	Safety Hazard
	Lethal exhaust gas hazards
	Explosive fuel hazards
	Burn hazards
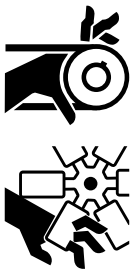	Rotating parts hazards
	Pressurized fluid hazards

GENERAL SAFETY

⚠ CAUTION

- **NEVER** operate this equipment without proper protective clothing, shatterproof glasses, respiratory protection, hearing protection, steel-toed boots and other protective devices required by the job or city and state regulations.

- Avoid wearing jewelry or loose fitting clothes that may snag on the controls or moving parts as this can cause serious injury.
- **NEVER** operate this equipment when not feeling well due to fatigue, illness or when under medication.

- **NEVER** operate this equipment under the influence of drugs or alcohol.

- **ALWAYS** clear the work area of any debris, tools, etc. that would constitute a hazard while the equipment is in operation.
- No one other than the operator is to be in the working area when the equipment is in operation.
- **DO NOT** use the equipment for any purpose other than its intended purposes or applications.

NOTICE

- This equipment should only be operated by trained and qualified personnel 18 years of age and older.
- Whenever necessary, replace nameplate, operation and safety decals when they become difficult read.
- Manufacturer does not assume responsibility for any accident due to equipment modifications. Unauthorized equipment modification will void all warranties.
- **NEVER** use accessories or attachments that are not recommended by Multiquip for this equipment. Damage to the equipment and/or injury to user may result.
- **ALWAYS** know the location of the nearest **fire extinguisher.**

- **ALWAYS** know the location of the nearest **first aid kit.**

- **ALWAYS** know the location of the nearest phone or **keep a phone on the job site.** Also, know the phone numbers of the nearest **ambulance, doctor** and **fire department.** This information will be invaluable in the case of an emergency.

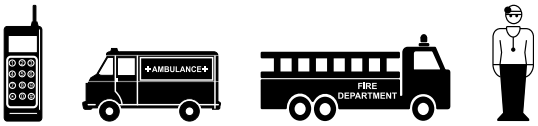

TROWEL SAFETY

⚠ DANGER

- Engine fuel exhaust gases contain poisonous carbon monoxide. This gas is colorless and odorless, and can cause death if inhaled.
- The engine of this equipment requires an adequate free flow of cooling air. **NEVER** operate this equipment in any enclosed or narrow area where free flow of the air is restricted. If the air flow is restricted it will cause injury to people and property and serious damage to the equipment or engine.

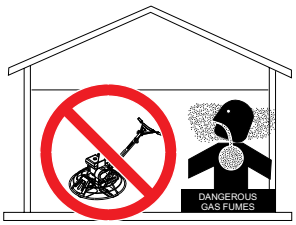

- **NEVER** operate the equipment in an explosive atmosphere or near combustible materials. An explosion or fire could result causing severe **bodily harm or even death.**

⚠ WARNING

- **ALWAYS** keep clear of rotating or moving parts while operating the trowel.

- **DO NOT** start or operate the trowel if the drive train will not disengage. Centrifugal force between the trowel and surface when starting can cause uncontrolled handle movement that can cause serious injury. The handle must not move while pulling the engine recoil starter.
- **NEVER** disconnect any **emergency or safety devices.** These devices are intended for operator safety. Disconnection of these devices can cause severe injury, bodily harm or even death. Disconnection of any of these devices will void all warranties.

⚠ CAUTION

- **NEVER** stand on trowel during operation.
- **NEVER** lubricate components or attempt service on a running machine.
- **NEVER** place your feet or hands inside the guard rings while starting or operating this equipment.

NOTICE

- **ALWAYS** keep the machine in proper running condition.
- Fix damage to machine and replace any broken parts immediately.
- **ALWAYS** store equipment properly when it is not being used. Equipment should be stored in a clean, dry location out of the reach of children and unauthorized personnel.
- A safety manual for operating and maintenance personnel of concrete power trowels produced by the Association of Equipment Manufacturers (AEM) can be obtained for a fee by ordering through their website at www.aem.org.

  Order FORM PT-160

ENGINE SAFETY

⚠ WARNING

- **DO NOT** place hands or fingers inside engine compartment when engine is running.
- **NEVER** operate the engine with heat shields or guards removed.
- Keep fingers, hands hair and clothing away from all moving parts to prevent injury.

- **DO NOT** remove the radiator cap while the engine is hot. High pressure boiling water will gush out of the radiator and severely scald any persons in the general area of the trowel.
- **DO NOT** remove the coolant drain plug while the engine is hot. Hot coolant will gush out of the coolant tank and severely scald any persons in the general area of the trowel.

- **DO NOT** remove the engine oil drain plug while the engine is hot. Hot oil will gush out of the oil tank and severely scald any persons in the general area of the trowel.

⚠ CAUTION

- **NEVER** touch the hot exhaust manifold, muffler or cylinder. Allow these parts to cool before servicing equipment.

NOTICE

- **NEVER** run engine without an air filter or with a dirty air filter. Severe engine damage may occur. Service air filter frequently to prevent engine malfunction.
- **NEVER** tamper with the factory settings of the engine or engine governor. Damage to the engine or equipment can result if operating in speed ranges above the maximum allowable.

FUEL SAFETY

DANGER

- DO NOT add fuel to equipment if it is placed inside truck bed with plastic liner. Possibility exists of explosion or fire due to static electricity.

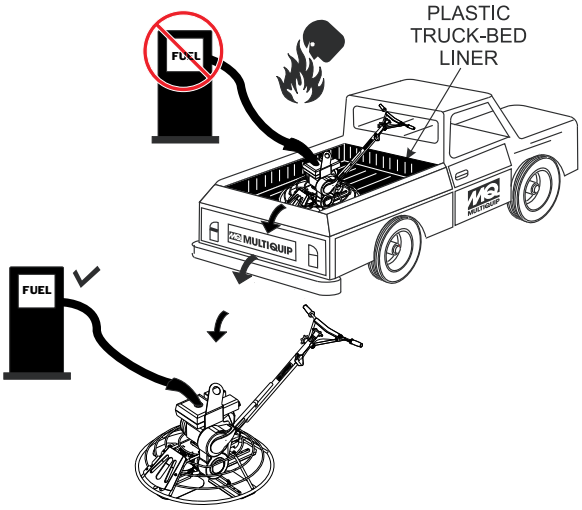

- **DO NOT** start the engine near spilled fuel or combustible fluids. Fuel is extremely flammable and its vapors can cause an explosion if ignited.
- **ALWAYS** refuel in a well-ventilated area, away from sparks and open flames.
- **ALWAYS** use extreme caution when working with **flammable** liquids.
- **DO NOT** fill the fuel tank while the engine is running or hot.
- **DO NOT** overfill tank, since spilled fuel could ignite if it comes into contact with hot engine parts or sparks from the ignition system.
- Store fuel in appropriate containers, in well-ventilated areas and away from sparks and flames.
- **NEVER** use fuel as a cleaning agent.
- **DO NOT** smoke around or near the equipment. Fire or explosion could result from fuel vapors or if fuel is spilled on a hot engine.

TRANSPORTING SAFETY

CAUTION

- **NEVER** allow any person or animal to stand underneath the equipment while lifting.

NOTICE

- Some walk-behind trowels can be lifted or moved by two people utilizing lifting tubes or other special attachments. Generally, however, they must be lifted using lifting bales and cranes, hoists, or forklifts.
- **NEVER** transport trowel with float pans attached unless safety catches are used and are specifically cleared for such transport by the manufacturer.
- **NEVER** hoist the trowel more than three feet off the ground with float pans attached.
- Before lifting, make sure that the lifting bales are not damaged.
- Always make sure crane or lifting device has been properly secured to the lifting bales of the equipment.
- **ALWAYS** shutdown engine before transporting.
- **NEVER** lift the equipment while the engine is running.
- Tighten fuel tank cap securely and close fuel cock to prevent fuel from spilling.
- Use adequate lifting cable (wire or rope) of sufficient strength.
- **DO NOT** lift machine to unnecessary heights.
- **ALWAYS** tie down equipment during transport by securing the equipment with rope.

GENERATOR SAFETY

If using a generator to power trowel, refer to applicable generator manual safety information section.

ELECTRICAL SAFETY

⚠ DANGER

- **NEVER** let power cords or cables **lay in water.**
- **NEVER** use **damaged** or **worn** cables or cords when connecting equipment to generator. Inspect for cuts in the insulation.
- **NEVER** grab or touch a live power cord or cable with wet hands. The possibility exists of **electrical shock, electrocution or death.**

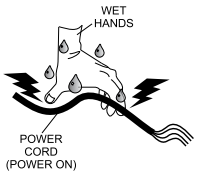

- Make sure power cables are securely connected. Incorrect connections may cause electrical shock and damage to the trowel.

NOTICE

- **ALWAYS** make certain that proper power or extension cord has been selected for the job.

ENVIRONMENTAL SAFETY

NOTICE

- Dispose of hazardous waste properly. Examples of potentially hazardous waste are used motor oil, fuel and fuel filters.

- **DO NOT** use food or plastic containers to dispose of hazardous waste.
- **DO NOT** pour waste, oil or fuel directly onto the ground, down a drain or into any water source.

Intended Use

Operate the B-46 Trowel, tools and components in accordance with the manufacturer's instructions. Use of any other tools for stated operation is considered contrary to designated use. The risk of such use lies entirely with the user. The manufacturer cannot be held liable for damages as a result of misuse.

B-46 Trowel Familiarization

This walk-behind trowel is designed for the ***floating*** and ***finishing*** of concrete slabs.

Take a walk around the trowel. Take notice of all the major components (see Figure 3) like the engine, blades, Quick Pitch™ handle, operator presence lever, etc. Check that there is always oil in the engine.

Read all the safety instructions carefully. Safety instructions will be found throughout this manual and on the trowel. Keep all safety information in good, readable condition. Operators should be well trained on the operation and maintenance of the trowel.

Before using your trowel, test it on a flat watered down section of finished concrete that is free of any debris and other objects.

This trial test run will increase your confidence in using the trowel and at the same time it will familiarize you with the trowel's controls. In addition you will understand how the trowel handles under actual conditions.

Engine

This trowel is available with a 9 or 11 HP ***HONDA*** gasoline engine, or a 9 HP ***ROBIN*** gasoline engine. Refer to the engine owner's manual for instructions regarding the operation and maintenance of your engine. Please contact your nearest Multiquip Dealer for a replacement should the original manual disappear or otherwise become unusable.

Drive System

Power is transferred from the engine to the gearbox input shaft via a V-belt pulley drive system. The pulley engages using a centrifugal clutch. See Parts section of this manual.

Gearbox

The ***gearbox*** is located beneath the engine and transfers power to the ***spider*** assembly. The gearbox controls the rotational speed of the trowel and is equipped with two shafts (input and output).

Spider

The vertical output shaft of the gearbox connects to a cast hub called the ***spider***. The spider has 4 arms that extend outward that are used for attachment of blades or other accessories. Remember as the gearbox output shaft rotates so does the spider assembly.

Guard Ring

This unit is equipped with a safety guard ring. It is designed to help protect items from coming into contact with the rotating blades while in operation.

Blades

The blades of the trowel finish the concrete as they are rotated around the surface. This trowel comes equipped with four ***combination*** (8 in./203mm wide) **blades** per rotor equally spaced in a radial pattern and attached to vertical rotating shaft by means of a ***spider assembly***.

Safety Stop Switch

In the event of a trowel runaway condition (operator releases the handlebars), the ***centrifugal safety stop switch*** will stop the engine and bring the trowel to a halt.

Operator Presence Lever (Optional Feature)

If equipped with the optional ***operator presence lever***, in the event of a trowel runaway condition (operator releases the handle), the ***operator presence lever*** signals the ***safety stop switch*** which will stop the engine and bring the trowel to a halt.

⚠ CAUTION

NEVER attempt to ***lift*** the trowel by yourself. **ALWAYS** get the assistance of another person to help lift the trowel .

Training

For proper training, please use the "**TRAINING CHECKLIST**" located in the front of this manual (Page 8). This checklist will provide an outline for an experienced operator to provide training to a new operator

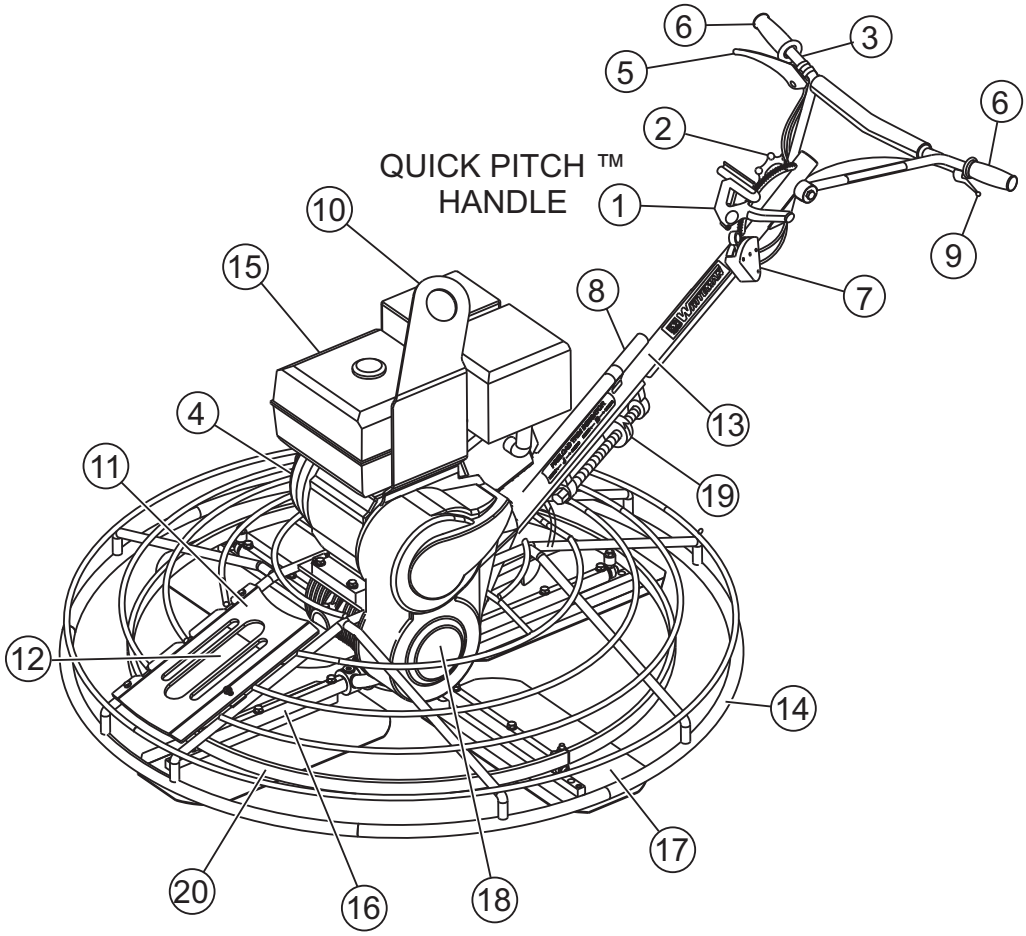

Figure 3. Controls And Components

Figures 3 shows the location of the basic controls or components, for the B-46 trowel. Listed below is a brief explanation of each control or component

1. **Quick Pitch™ Control Handle –** To adjust the pitch of the blades, grasp the handle then squeeze and either move the handle forward or backward to achieve the desired blade pitch.
2. **Handlebar Adjuster –** Change the angle/height of the handle bars by loosening star wheel, adjust handlebars to desired location, tighten starwheel firmly to hold handlebars in that position.
3. **Handle Bar –** When operating the trowel, place both hands on each grip to maneuver the trowel.
4. **Recoil Starter Housing –** Automatically spools the recoil starter rope when using to start the engine.
5. **Operator Presence Lever (Optional Feature) –** If equipped with the optional ***operator presence lever***, in the event of a trowel runaway condition (operator releases the handle), the ***operator presence lever*** signals the ***safety stop switch*** which will stop the engine and bring the trowel to a halt.
6. **Hand Grip –** Replace hand grips when they become worn or damaged.
7. **Centrifugal "Kill" Switch –** In the event the operator loses control of the trowel, this switch will shut-down the engine.
8. **Auxiliary Lifting Tube -** Use this tube to lift the trowel onto a slab. Tube is to be inserted into socket located in front of the gearbox.
9. **Throttle Lever –** Controls engine speed. Returns engine to idle when released.
10. **Trowel Lifting Point –** The trowel is equipped with a lifting bail that can be used to safely lift and move the trowel.
11. **Access Door –** Hinged door allows access to the blade area.
12. **Lifting Tube Access Slot –** Insert the auxilary lifting tube here.
13. **Main Tube** - When disassembling components inside the tube exercise extreme **CAUTION!** Tube is spring-loaded, severe injury could result if not disassembled correctly.
14. **Guard Ring- NEVER!** put hands or feet inside guard ring while the machine is running.
15. **Engine** – This trowel uses a Honda or a Robin gasoline engine.
16. **Trowel Arm – NEVER** operate the trowel with a bent, broken or out of adjustment trowel arm. If the blades show uneven wear patterns or some blades wear out faster than others, the trowel arm may need to be adjusted. Use the trowel arm adjustment tool P/N 1817 to adjust the trowel arms.
17. **Blades –** This trowel is equipped with combination blades. These blades are versatile and should take care of most troweling needs. In addition float discs can be attached to the trowel arms that will allow the trowel to float on "wet" concrete.
18. **V-Belt Cover –** Remove this cover to gain access to the V-belt. **NEVER** operate the trowel with this cover removed.
19. **Pre-Load Adjuster (Quick Pitch Handle) –** Handle Pre-Load can be adjusted to the specific trowel that the handle is affixed to. For the B-46 Series, the adjustment screw should be set with the arrow aligned to the letter "B".
20. **Stabilizer Ring –** Holds blades in position relative to the other blades to help provide smooth and consistant troweling.

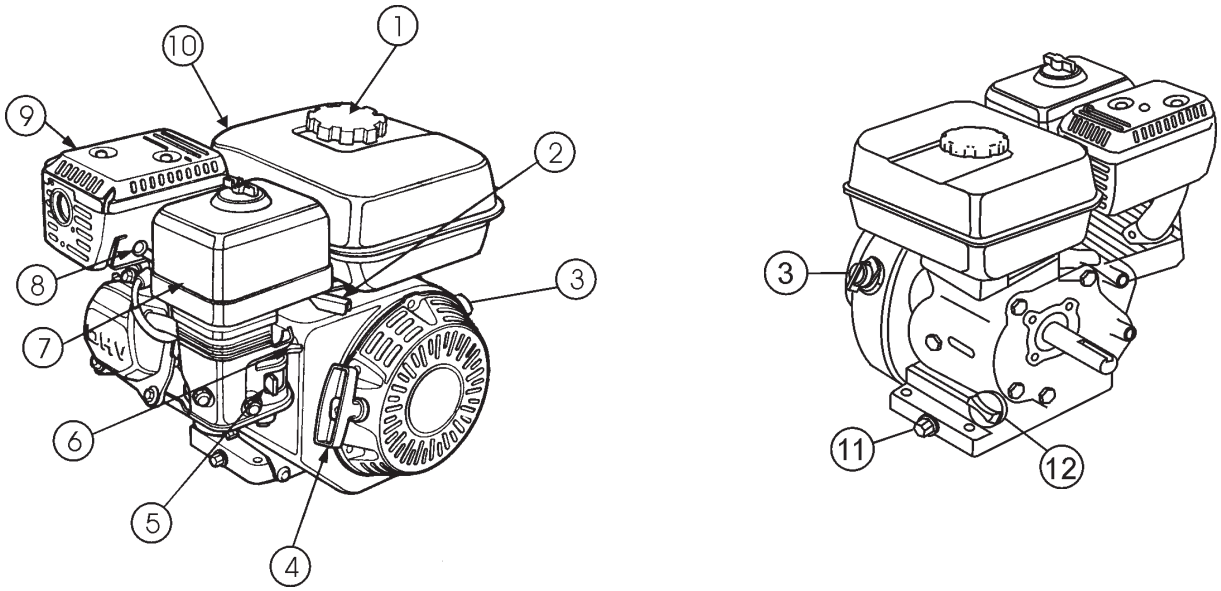

Figure 4. Engine Controls and Components

INITIAL SERVICING

The engine (Figure 4) must be checked for proper lubrication and filled with fuel prior to operation. Refer to the manufacturer's engine manual for instructions & details of operation and servicing. The engine shown above is a **HONDA** engine, operation for other types of engines may vary somewhat.

1. **Fuel Filler Cap –** Remove this cap to add unleaded gasoline to the fuel tank. Make sure cap is tightened securely. **DO NOT** over fill.

DANGER

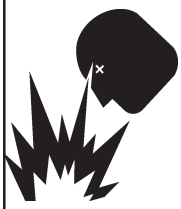

Adding fuel to the tank should be done only when the engine is stopped and has had an opportunity to cool down. In the event of a fuel spill, **DO NOT** attempt to start the engine until the fuel residue has been completely wiped up, and the area surrounding the engine is dry.

2. **Throttle Lever –** Used to adjust engine RPM speed (lever advanced forward ***SLOW***, lever back toward operator ***FAST***).
3. **Engine ON/OFF Switch –** ***ON*** position permits engine starting, ***OFF*** position stops engine operation.
4. **Recoil Starter (pull rope) –** Manual-starting method. Pull the starter grip until resistance is felt, then pull briskly and smoothly.
5. **Fuel Valve Lever – OPEN** to let fuel flow, **CLOSE** to stop the flow of fuel.
6. **Choke Lever –** Used in the starting of a cold engine, or in cold weather conditions. The choke enriches the fuel mixture.
7. **Air Cleaner –** Prevents dirt and other debris from entering the fuel system. Remove wing-nut on top of air filter cannister to gain access to filter element.

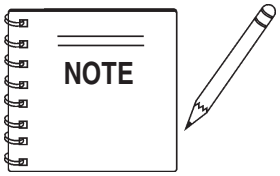

Operating the engine without an air filter, with a damaged air filter, or a filter in need of replacement will allow dirt to enter the engine, causing rapid engine wear.

8. **Spark Plug –** Provides spark to the ignition system. Set spark plug gap according to engine manufacturer's instructions. Clean spark plug once a week.
9. **Muffler –** Used to reduce noise and emissions.
10. **Fuel Tank –** Holds unleaded gasoline. For additional information refer to engine owner's manual.
11. **Oil Drain Plug –** Remove this plug to remove oil from the engine's crankcase.
12. **Dipstick/Oil Filler Cap –** Remove this cap to determine if the engine oil is low. Add oil through this filler port as recommended in Table 4.

Assembly and Installation

Before the trowel can be put into operation there are some components that must be installed before the trowel can be used. This section provided general instructions on how to install those components. Instruction sheet P/N 20485 provides further details for the handle assembly.

Handle Tube Installation (All Models)

1. Install the ***handle tube*** to the gearbox as shown in (Figure 5). The mounting hardware should be contained in the shipping container.

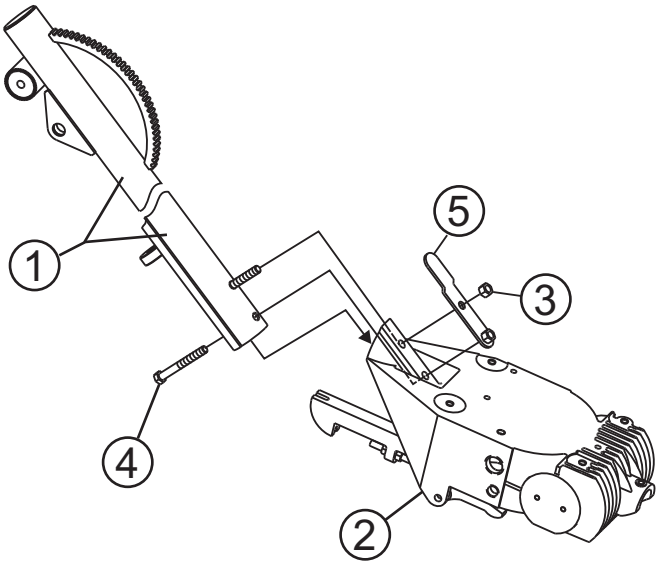

1 **Main Handle (Tube)**
2 **Gearbox**
3 **3/8" Hex Nut**
4 **3/8" Hex Head Screw**
5 **Lift Tube Bracket**

Figure 5. Handle Tube Installation

2. Pivot the ***T-handle*** back (full pitch) (Figure 6). This will relax the spring inside the handle tube. Spread the handle bar ends just enough to engage the teeth on the handle tube. Attach the hand wheel assembly, position handlebar to desired location, and tighten hand wheel firmly.

⚠ CAUTION

The Quick-Pitch™ handle is spring loaded, personal injury or damage could result from improper handling or installation. Be careful when installing this component.

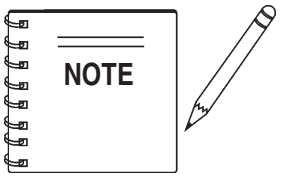

Considerable force may be required when moving the Quick-Pitch™ **T-handle** forward or backward.

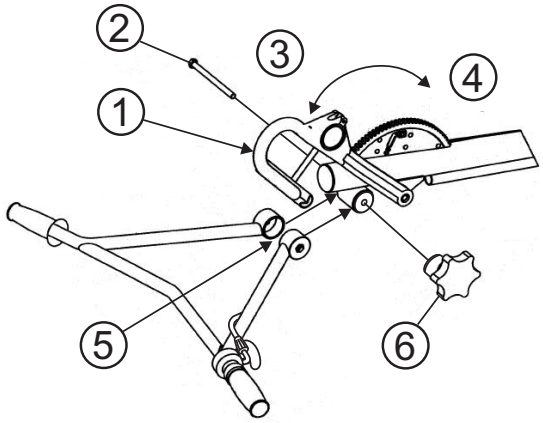

1 **Pivot Pitch Handle (Pivot back to relieve spring tension)**
2 **Hex Screw (3/8 - 16 x 5)**
3 **Full Pitch**
4 **No Pitch**
5 **Spread Slightly to Install**
6 **Hand Wheel**

Figure 6. Handlebar Installation

Throttle Cable Installation

1. Uncoil the throttle cable and housing.
2. Feed the throttle cable through the cable housing.
3. Connect the throttle cable to the engine. (Figure 7), **HONDA** and (Figure 8), **ROBIN**. There should be a piece of wire installed on the trowel to show where to route the throttle cable. Route cable end (item 2) through the spring (item 4) and swivel stop (item 6). When connecting the cable housing, make sure that no more than ***1/4" (6.4mm)*** of the cable housing (item 5) protrudes past the housing clamp (item 7) on the engine.

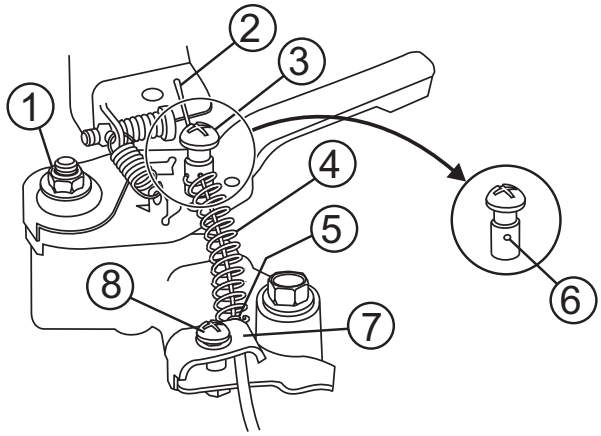

1 **Adjuster Nut**
2 **Cable End**
3 **Swivel Stop**
4 **Idle Return Spring**
5 **Cable Housing (End)**
6 **Swivel Stop Hole**
7 **Cable Housing Clamp**
8 **Clamp Screw**

Figure 7. Throttle Cable Connection (HONDA)

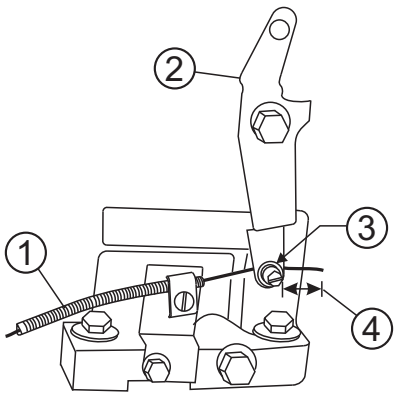

1 **Throttle Cable**
2 **Engine Throttle Lever**
3 **Place Throttle Cable Here**
4 **1/4" (6.4mm) Deflection**

Figure 8. Throttle Cable Connection (ROBIN)

4. Tighten cable clamp screw (item 8) and swivel stop screw (item 3).
5. After the cable has been installed on the engine, adjust and tighten operator position of the handle to lock the throttle cable at the proper length.
6. Adjust cable tension. Loosen the lock nut on the throttle cable receiver (Figure 9) and loosen or tighten the nut below it. Retighten the lock nut.

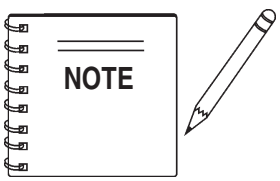

If the throttle lever does not return to the "neutral" position with throttle backed off, loosen adjuster nut (item 1) 1/2 turn at a time, tighten and recheck. Readjust throttle tension as necessary.

7. These are general instructions. Installation of the throttle cable may vary for different engine configurations. Please look for more detailed instructions inside the box containing the handle. These more detailed instructions should provide adequate guidance for installing.

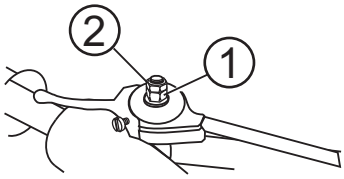

1 **Adjusting Nut**
2 **Locking Nut**

Figure 9. Safety Wire Connection

Handle Height Adjustment

If handle height adjustment is desired, a handle wedge kit can be purchased for your trowel by ordering P/N 2576 from your Multiquip dealer. These wedges are placed between the handle and the gearbox to adjust the operating height of the handle. This kit comes complete with wedges, new bolts and installation instructions. This will move your operating handle position up or down approximately 3" (76mm).

Operator Presence Switch Installation (Optional)

Your adjustable handle utilizes an "Operator Presence Switch" that shuts the engine down once the Operator Presence Lever is released. To install the lever, switch, and associated wiring, perform the following procedures:

1. Ensure the handle tube is properly installed onto the gearbox, handlebars onto the handle tube, and throttle cable installed according to the instruction sheet provided with the handle.
2. Connect the Safety Stop Wire from the Safety Stop Switch to the tail wire on the engine. (Figure 10)

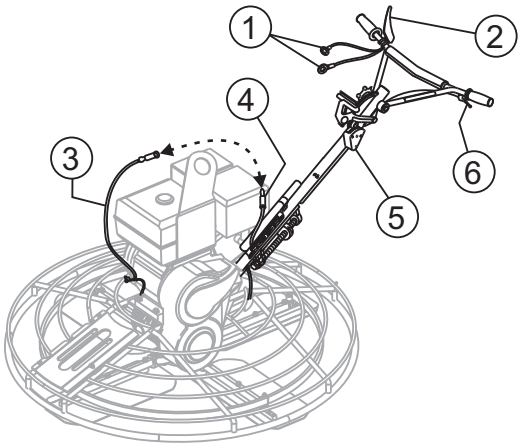

1 **Operator Presence Wiring (Option)**
2 **Operator Presence Lever (Option) (Temporary Positioning for Shipping)**
3 **Tail Wire From Engine**
4 **Safety Stop Wire From Switch**
5 **Safety Stop Switch**
6 **Throttle Lever**

Figure 10. Safety Wire Connection

3. Install the ground wire to the engine, (Honda engine shown, Figure 11).

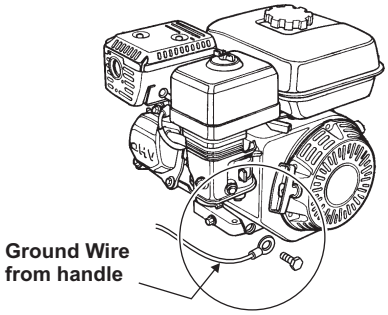

Figure 11. Ground Wire Connection

4. If so equipped, re-position the Operator Presence Lever on the handlebars, (Figure 12).

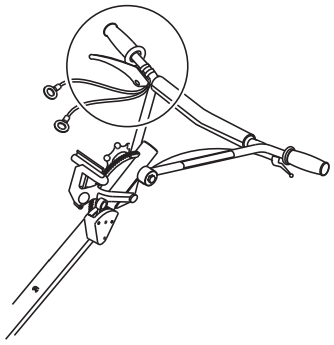

Figure 12. Repositioning the Lever

5. Remove one 7mm nut from each of the terminals on the Safety Stop Switch. (Leave the existing two wires to the switch connected.) (Figure 13).

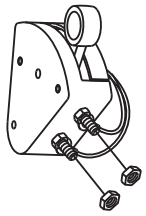

Figure 13. Safety Stop Switch Connection

6. Connect the two wires from the Operator Presence Lever to the Safety Stop Switch terminal lugs. (one per lug; either position). Re-install and tighten the nuts. (Figure 14).

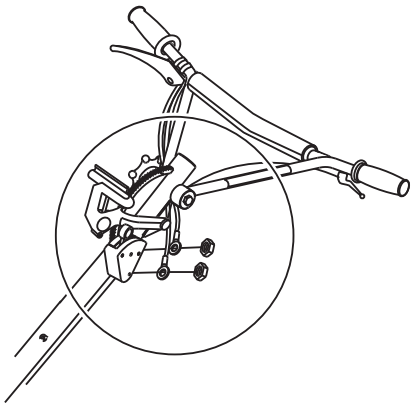

Figure 14. Wiring Connection

Pitch Cable Installation

1. Expose the pitch cable to maximum by adjusting the handle pitch to the "no pitch" position. Pivot the pitch handle forward or no pitch, (Figure 15).

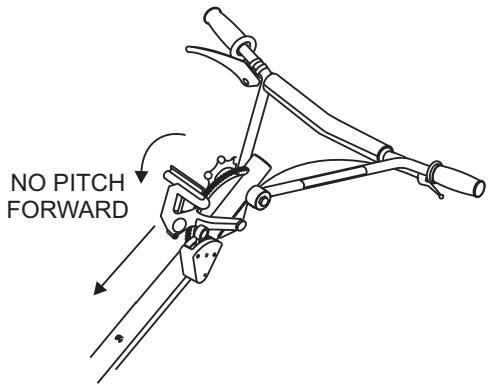

Figure 15. "No Pitch" Position

2. Lock the spring in the compressed position, by releasing the blade pitch adjustment trigger.
3. Remove one brass set nut from the blade pitch cable end as shown in (Figure 16).
4. Thread the second brass set nut towards the cable as far as possible.

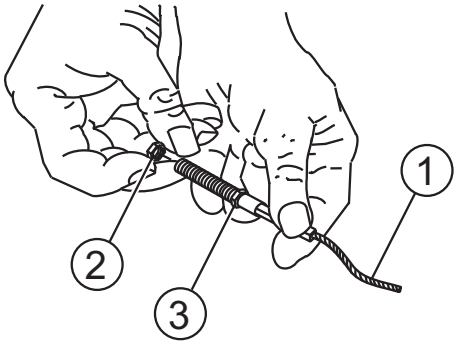

1 **Blade Pitch Cable**
2 **Remove First Brass "Set" Nut**
3 **Thread Second Brass "Set" Nut to End of Cable**

Figure 16. Blade Pitch Cable

5. Insert the cable end through the yoke eyelet (Figure 17) Tighten the first brass set nut by hand to remove all the slack from the cable.
6 Using a wrench, tighten the second brass set nut up against the yoke boss. This will lock the cable in place.
7. Use a wrench and finish tightening the first brass set nut up against the yoke boss.

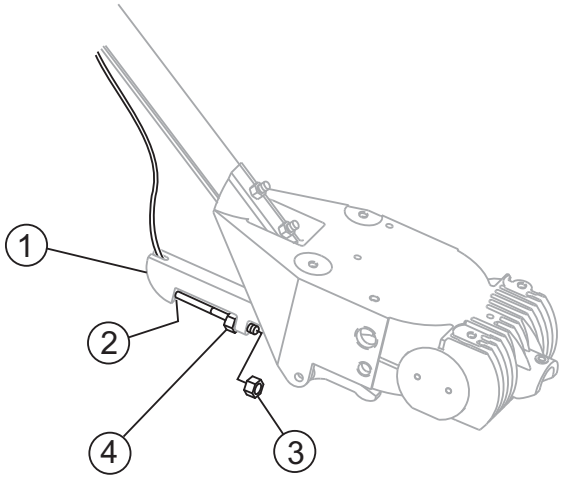

1 **Yoke**
2 **Thread Cable End Through Yoke Eyelet**
3 **Use a Wrench to Tighten First Brass Set Nut Against Yoke Boss**
4 **Tighten Second Brass Set Nut Against Yoke Boss**

Figure 17. Cable Yoke Attachment

Pre-load Adjustment

1. After the Quick-Pitch™ handle has been installed on the trowel, spring pre-load adjustment will be required.
2. Locate the adjustment screw on the underside of the handle tube (Figure 18).

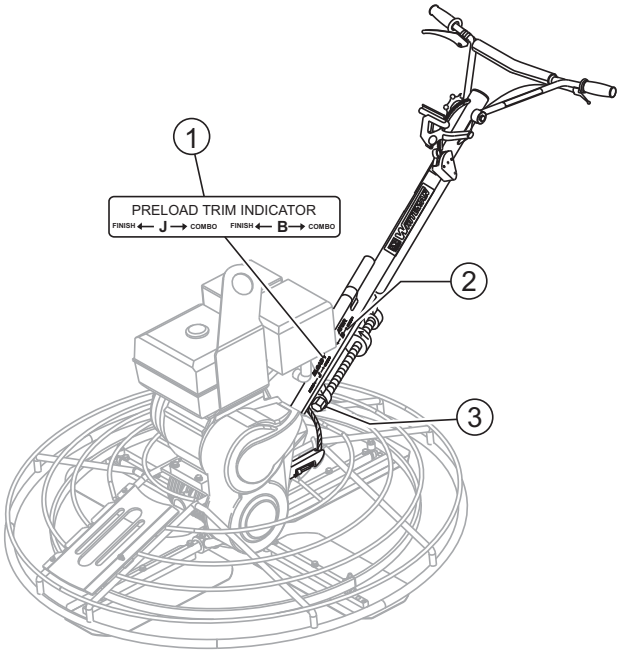

1 **Alignment Decal**
2 **Align This Arrow With The Letter "B" Combo On Decal**
3 **Adjustment Screw**

Figure 18. Pre-load Adjustment

3. A ***decal*** has been placed on the side of the handle tube to assist the user in the adjustment of the spring.
4. Align the ***arrow*** on the adjustment screw with the letter "**B**" ***COMBO*** on the ***decal***. The letter "**B**" stands for B-46 Walk-Behind trowel.
5. Test the pitch control operation and adjust if necessary.

⚠ CAUTION

ALWAYS wear approved eye and hearing protection before operating the trowel.

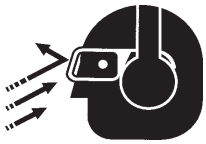

NEVER place hands or feet inside the guard rings while the engine is running. **ALWAYS** shut the engine down before performing any kind of maintenance service on the trowel.

Before Starting

1. Read safety instructions at the beginning of manual.
2. Clean the trowel, removing dirt and dust, particularly the engine cooling air inlet, carburetor and air cleaner.
3. Check the air filter for dirt and dust. If air filter is dirty, replace air filter with a new one as required.
4. Check carburetor for external dirt and dust. Clean with dry compressed air.
5. Check fastening nuts and bolts for tightness.

Engine Oil Check

1. To check the engine oil level, place the trowel on secure level ground with the engine stopped.
2. Remove the filler dipstick from the engine oil filler hole (Figure 19) and wipe clean.

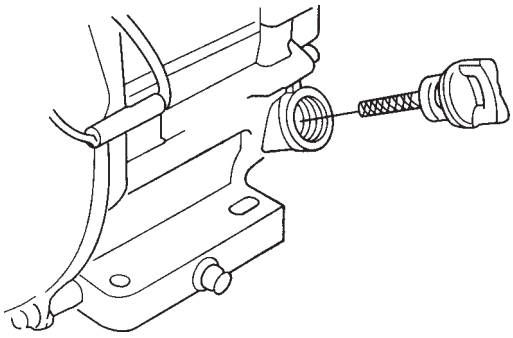

Figure 19. Engine Oil Dipstick (Removal)

3. Insert and remove the dipstick without screwing it into the filler neck. Check the oil level shown on the dipstick.
4. If the oil level is low (Figure 20), fill to the edge of the oil filler hole with the recommended oil type (Table 5).

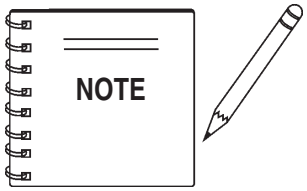

Reference manufacturer engine manual for specific servicing instructions.

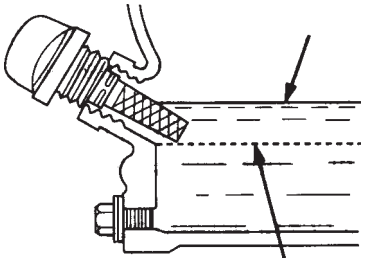

Figure 20. Engine Oil Dipstick (Oil Level)

Table 5. Oil Type

Season	Temperature	Oil Type
Summer	25°C or Higher	SAE 10W-30
Spring/Fall	25°C~10°C	SAE 10W-30/20
Winter	0°C or Lower	SAE 10W-10

⚠ DANGER

EXPLOSIVE FUEL!
Motor fuels are highly flammable and can be dangerous if mishandled. **DO NOT** smoke while refueling. **DO NOT** attempt to refuel the trowel if the engine is ***hot!*** or ***running***.

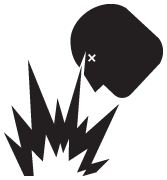

Fuel Check

1. Remove the gasoline cap located on top of fuel tank.
2. Visually inspect to see if fuel level is low. If fuel is low, replenish with unleaded fuel.
3. When refueling, be sure to use a strainer for filtration. **DO NOT** top-off fuel. Wipe up any spilled fuel.

Gearbox Oil

1. Determine if the ***gearbox*** oil is low by removing the oil plug located on the side of the gearbox. (Figure 21) This plug will be marked by the "***check***" decal. The correct level of the lubrication oil should be to the bottom of the fill plug.

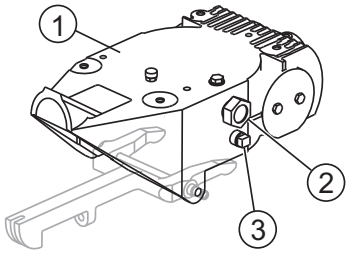

1 **Gear Box**
2 **Oil Sight/Fill Plug**
3 **Drain Plug**

Figure 21. Gearbox

2. If lubrication oil begins to seep out as the drain plug is being removed, then it can be assumed that the gearbox has a sufficient amount of oil.
3. If lubrication oil does not seep out as the drain plug is being removed, fill with type ISO 680 (Whiteman P/N 10139) gearbox lubricant oil until the oil filler hole overflows.

⚠ CAUTION

Disconnect the spark plug wire from the spark plug and secure away from the engine before performing maintenance or adjustments on the machine.

V-Belt Check

A worn or damaged V-belt can adversely affect the performance of the trowel. If a V-belt is defective or worn simply replace the V-belt as outlined in the maintenance section of this manual.

Belt Guard Check

Check for damage, loose or missing hardware.

Blade Check

Check for worn or damaged blades. Check to see if one blade is worn out while the others look new. If this is the case there could be a blade pitch problem. Refer to the maintenance section of this manual for blade pitch adjustment procedure. Replace any worn blades.

CONTROLS

Safety-Stop "Kill" Switches

This trowel has been equipped with a safety "kill" switch. This switch should be tested every time the engine is started.

⚠ WARNING

NEVER disable or disconnect the safety "kill" switch. It is provided for operator safety. Injury may result if it is disabled, disconnected or improperly maintained.

Centrifugal Type "Kill" Switch

(Figure 22) The switching mechanism of this switch should operate freely and should ***always*** be kept in this condition. With the switch in the **OFF** position, the engine should not start or run. The purpose of this switch is to stop the engine in a runaway situation, (i.e. the operator releasing the handle during operation).

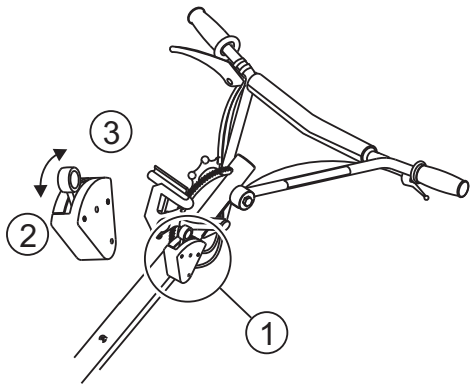

1 **"Kill" Switch (Safety Stop)**
2 **"ON" Position**
3 **"OFF" Position**

Figure 22. Centrifugal "Kill" Switch

⚠ CAUTION

This section is intended to assist the operator with the initial start-up of the walk-behind trowel. It is extremely important that this section be read carefully before attempting to use the trowel in the field.

DO NOT use your trowel until this section is thoroughly understood.

DO NOT attempt to operate the trowel until the Safety, General Information and Inspection sections of this manual have been read and thoroughly understood. Depending on engine manufacturer, operating steps may vary. See engine manufactures operating manual. The following start-up procedure makes reference to a **HONDA Engine (Manual Start).**

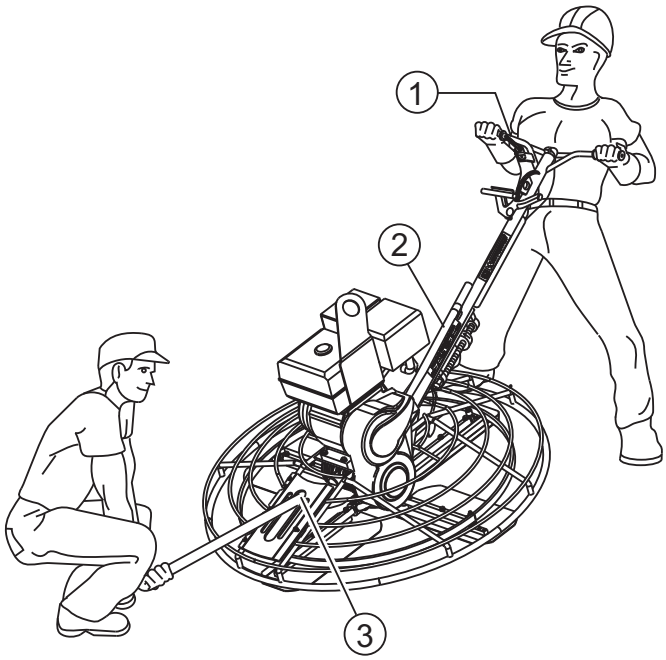

1 **Operator's Handle**
2 **Auxiliary Lifting Tube**
3 **Insert Tube Through Slot For Lifting**

Figure 23. Lifting the Trowel

Lifting the Trowel Onto a Slab

Extra care should be taken when lifting the trowel off the ground. Serious damage to the machine or personal injury could be caused by dropping a trowel.

⚠ CAUTION

The trowel is ***heavy*** and ***awkward*** to move around. Use proper heavy lifting procedures and **DO NOT** ***lift the trowel by the guard rings.***

Auxiliary Lifting Tube

Remove the auxiliary lifting tube located on top of the main handle. Insert the tube into the socket located on the opposite side of the gearbox (Figure 23) from the handle.

Make sure that the hole in the tube engages with the pin in the socket. With one person lifting from the main handle, and another lifting from the auxiliary lifting tube pick up the machine to move onto a slab.

⚠ CAUTION

The trowel must be stabilized by the person carrying the ***operator's handle*** (Figure 23). If it is not stabilized properly the handle may swing around and ***flip*** the trowel, thus causing damage to the trowel and bodily injury.

Lifting Bale

The lift bale (Item 10, page 17), provides an optimal lift point for moving the trowel. ***Lift bales*** or ***forklift*** can be used to lift a trowel up onto a building with a crane.

Using a ***crane*** to move a machine with a lift bale is highly recommended, and is perfectly safe for the machine. Extra care should be taken when lifting the machine off the ground, however. Serious damage to the machine or personal injury could be caused by dropping a trowel.

Starting the Engine (*HONDA* engine)

1. Place the engine ***fuel valve lever*** (Figure 24) to the "**ON**" position.

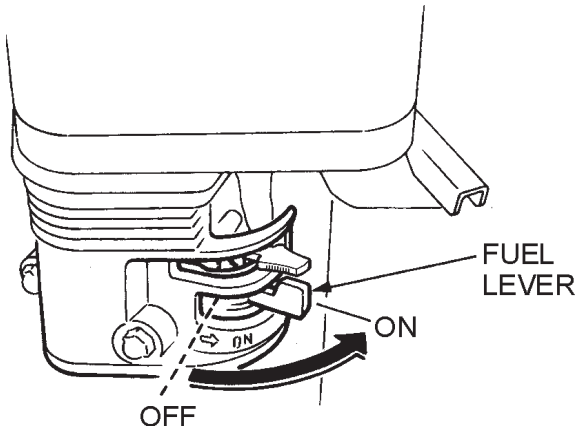

Figure 24. Engine Fuel Valve Lever

3. Place the ***centrifugal "kill" switch*** (Figure 25) in the "**ON**" position. For models that use this feature.

CAUTION

NEVER disable or disconnect the centrifugal kill switch. It is provided for the operators' safety and injury may result if it is disabled, disconnected or improperly maintained.

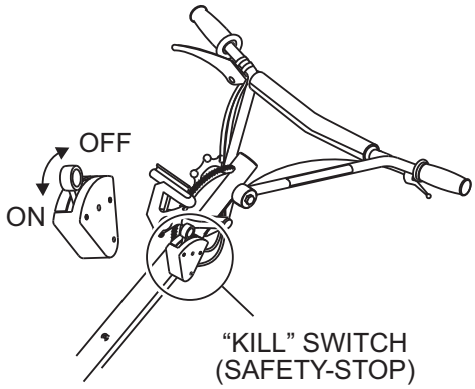

Figure 25. Centrifugal "Kill" Switch

4. Place the ***Choke Lever*** (Figure 26) in the "***OPEN***" position

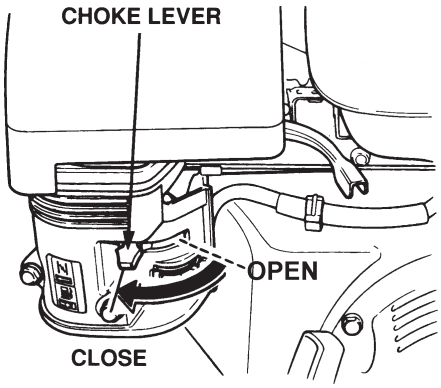

Figure 26. Engine Choke Lever

5. Grasp the starter grip (Figure 27) and slowly pull it out. The resistance becomes the hardest at a certain position, corresponding to the compression point. Pull the starter grip briskly and smoothly for starting.

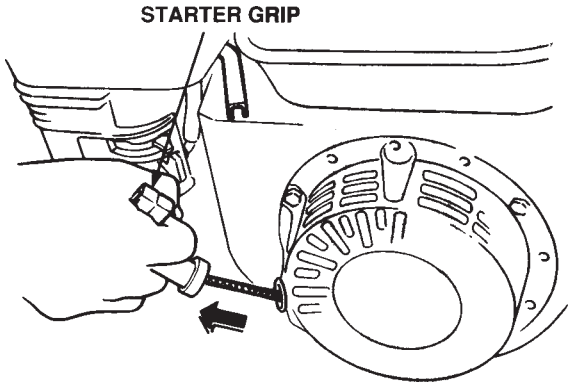

Figure 27. Starter Grip

6. If the engine has started, slowly return the choke lever (Figure 26) to the ***CLOSED*** position. If the engine has not started repeat steps 1 through 5.

7. Before the trowel is placed into operation, run the engine for several minutes. Check for fuel leaks, and noises that would associate with a loose guard ring and/or covers.

8. To begin troweling, while holding onto the handlebar grips, grasp and pull in the Operator Presence Lever if so equipped. (Figure 28).

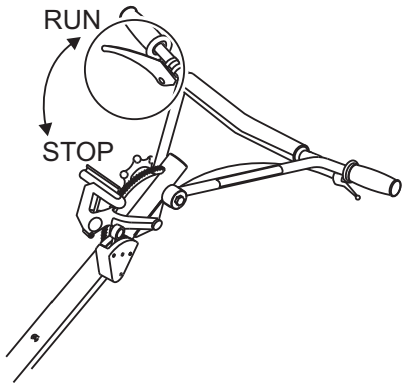

Figure 28. Operator Presence Lever (Run Position)

(Optional Feature)

The following steps are intended as a basic guide to machine operation, and are not to be considered a complete guide to concrete finishing. We suggest that all operators (experienced and novice) read "***Slabs on Grade***" published by the ***American Concrete Institute, Detroit, Michigan***. Read the "Training" section of this manual for more information.

Pitching The Blades

Quick Pitch Handle

1. To pitch the blades upwards using the ***"Quick-Pitch™" T-handle***, (Figure 29) simply squeeze the trigger lock and pull the ***T-handle*** towards the operator. Pushing the ***T-handle*** towards the engine will cause the blades to lay flat.

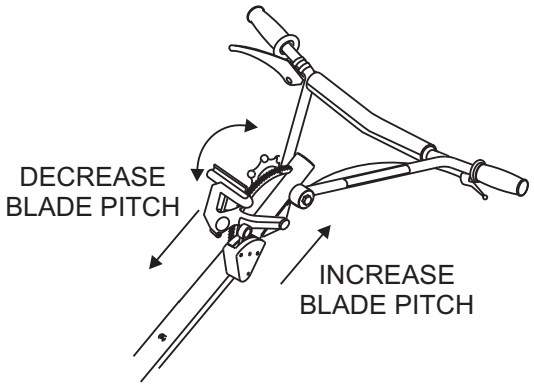

Figure 29. Quick-Pitch™ T- Handle

Maneuvering the Trowel

1. Get into the operator's position behind the handle. With a secure foothold and a firm grasp on the handles slowly increase the engine speed until the desired blade speed is obtained.

2. To maneuver the trowel, gently lift up on or press down on the main trowel handle. To move the machine to the operator's left, ***lift up*** on the handle, to move machine to the right, ***push down*** on the handle.

3. The best method for finishing concrete is to slowly walk backwards (Figure 31) with the trowel, guiding the trowel from side to side. This will cover all footprints on wet concrete.

4. Remember that if you let go of the trowel, just step away and let the trowel come to a complete stop before trying to recover the trowel.

Stopping The Engine

1. Move the throttle lever to the **IDLE** or **SLOW** position and run the engine for three minutes at low speed.

2. After the engine ***cools***, turn the engine start/stop switch to the "**OFF**" position (Figure 30).

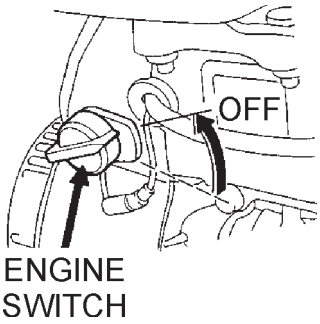

Figure 30. Engine ON/OFF Switch (OFF Position)

3. Close the ***fuel shut-off valve*** (Figure 31) by moving the fuel valve lever to the **OFF** position.

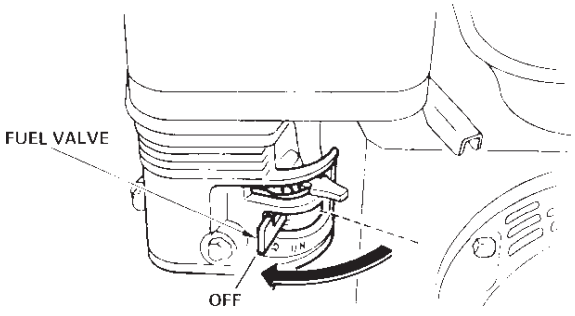

Figure 31. Fuel Valve Lever (OFF Position)

Figure 32 below illustrates a typical walk-behind trowel application. Practice maneuvering the trowel. The trick is to let the trowel do the work.

Continue to practice maneuvering the trowel. Try to practice as if you were finishing a slab of concrete. Practice edging and covering a large area. Remember a good finishing technique is to work backwards. Be careful when moving backwards so that hazards can be avoided. The best way to get accustomed to the trowel is repeated use.

To move the trowel to the operator's left, ***lift up*** on the handle, to move the trowel to the right ***push down*** on the handle.

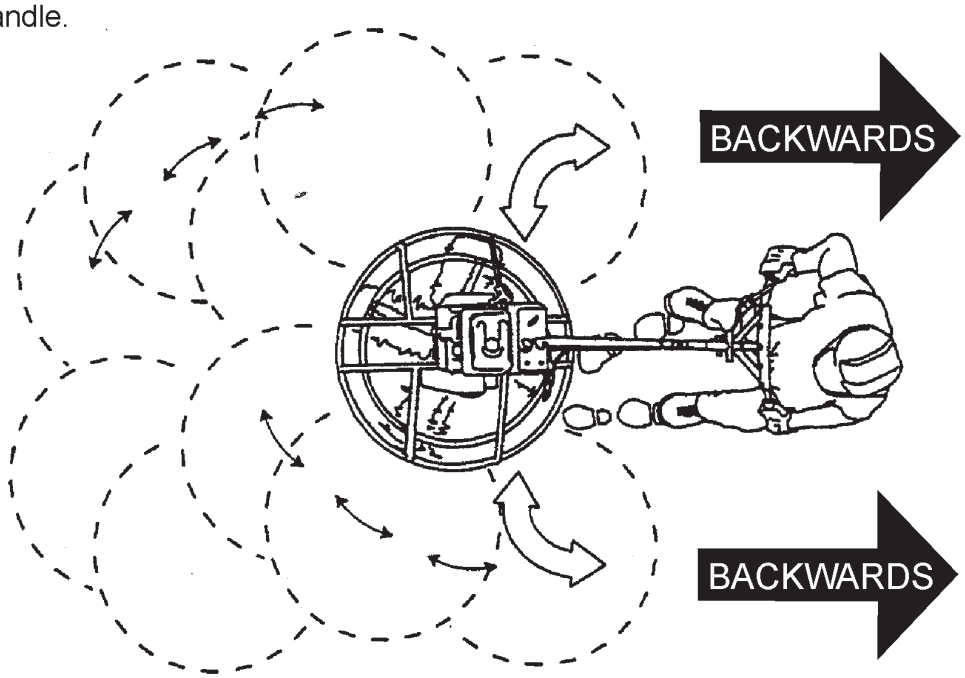

Remember! that if you let go of the trowel, just ***step away*** and let the trowel come to a complete **STOP** before trying to recover the trowel.

The best method for finishing concrete is to slowly walk ***backwards*** with the trowel, guiding the trowel from side to side. This will cover all footprints on wet concrete.

Figure 32. Maneuvering The Trowel

CAUTION

NEVER place your ***feet*** or ***hands*** inside the guard rings while starting or operating this equipment.

CAUTION

ALWAYS keep clear of ***rotating*** or ***moving*** parts while operating this equipment.

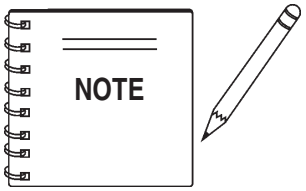

Blades should be changed when they fail to finish concrete in a satisfactory manner.

Blades are a vital part of finishing concrete. This trowel, or ***finisher***, has been designed to finish concrete and the blades are built to stringent quality standards out of the finest trowel steel. If you need replacement blades, consult your parts list in this manual for part numbers and order them from your Multiquip parts dealer or importer.

Combo Blades

This trowel was equipped with combination ***float/finish*** (Figure 33) blades as original equipment. These blades have been designed for optimum performance in both the floating and finishing operations. These blades are versatile and should take care of most troweling needs.

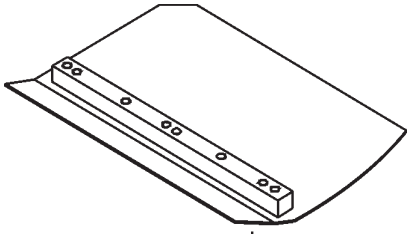

Figure 33. Combination Blade

Finish Blades (Optional)

These blades (Figure 34) have been specifically designed for finish operations with this trowel. They will provide a premium surface finishing capability from your trowel. They should only be used after the concrete has set to the point where the trowel does not sink into the concrete when placed on it.

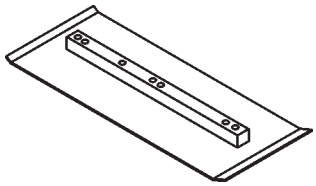

Figure 34. Finish Blade

Clip-On Float Blades (Optional)

These blades will clip (Figure 35) on to an existing installed blade, allowing your finisher to float on "wet" concrete so that the troweling operation can begin as early as possible. They are easily removable, so that after the floating operation, when the concrete is sufficiently cured, they can be removed to expose the finish blades for continued troweling.

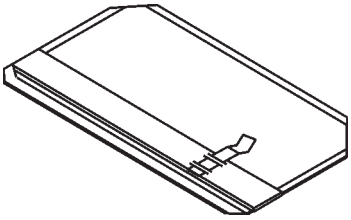

Figure 35. Clip-On Float Blade

Float Discs (Optional)

These round discs (Figure 36) attach to the spiders and allow the machine to "float" on "wet" concrete. The disc design allows early floating and easy movement from wet to dry areas. They are also very effective in embedding large aggregates and surface hardeners.

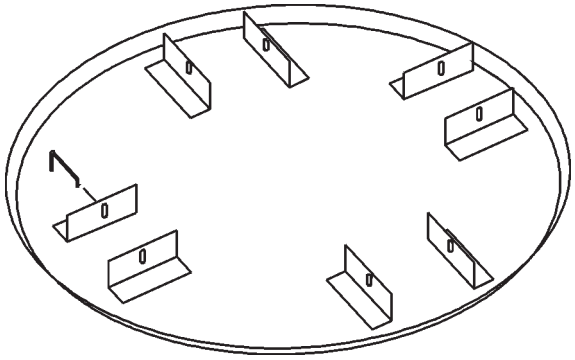

Figure 36. Float Disk

Trowel Arm Adjustment Tool

If blades show uneven wear patterns or some tend to wear out faster than others, the trowel arms may need to be adjusted. A special tool is available (Figure 37) that will adjust all of the trowel arms consistently. The Trowel Arm Fixture P/N is 1817.

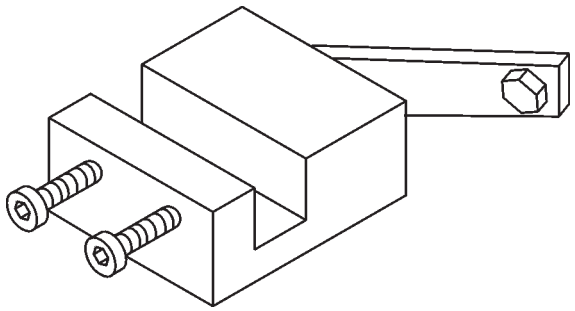

Figure 37. Trowel Arm Adjustment Fixture

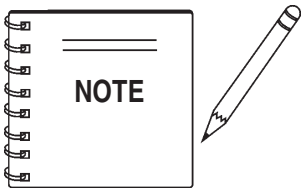

See the engine manual supplied with your machine for appropriate engine maintenance schedule and troubleshooting guide for problems.

At the front of the book (Page 9) there is a "***Daily Pre-Operation Checklist***". Make copies of this checklist and use it on a daily basis.

⚠ CAUTION

ALWAYS allow the engine to cool before servicing. **NEVER** attempt any maintenance work on a ***hot!*** engine.

⚠ CAUTION

Disconnect the spark plug wire from the spark plug and secure away from the engine before performing maintenance or adjustments on the machine.

MAINTENANCE SCHEDULE

Daily (8-10 Hours)

1. Check the oil level in the engine crankcase and gear box, fill as necessary.
2. Check V-belt.

Weekly (50-60 Hours)

1. Relube arms, thrust collar and clutch.
2. Replace blades if necessary.
3. Check and clean or replace the engine air filter as necessary.
4. Replace engine oil and filter as necessary, see engine manual.

Monthly (200-300 Hours)

1. Remove, clean, reinstall and relube the arms and thrust collar. Adjust the blade arms.
2. Remove, clean, reinstall clutch.

Yearly (2000-2500 Hours)

1. Check and replace if necessary the arm bushings, thrust collar bushings and shaft seals.
2. Check pitch control cables for wear.
3. Adjust blade speed.

Blade Pitch Adjustment Procedure

Maintenance adjustment of blade pitch is made by adjusting a bolt (Figure 38) on the arm of the trowel blade finger. This bolt is the contact point of the trowel arm to the lower wear plate on the thrust collar. The goal of adjustment is to promote consistent blade pitch and finishing quality.

Look for the following indications if blades are wearing unevenly. If so, adjustment may be necessary.

- If one blade is completely worn out while the others look new?
- Does the machine have a perceptible rolling or bouncing motion when in use?
- Look at the machine while it is running, do the guard rings "rock up and down" relative to the ground?
- Do the pitch control towers rock back and forth?

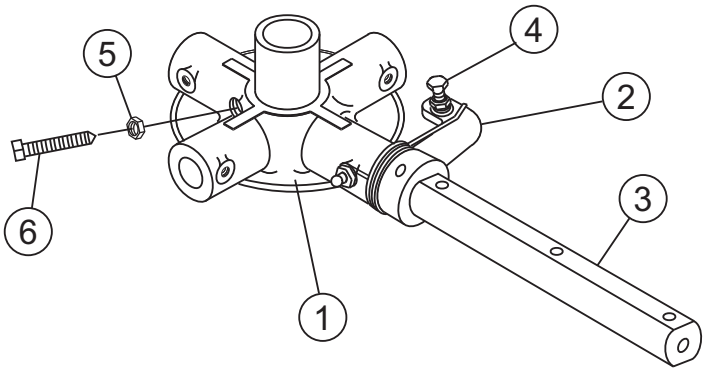

1 **Spider Plate**
2 **Trowel Lever (Finger)**
3 **Trowel Arm**
4 **Blade Pitch Adjustment Bolt**
5 **Jam Nut**
6 **Cone head set screw**

Figure 38. Blade Pitch Adjustment Bolt

The easiest and most consistent way to make adjustments on the trowel arm fingers is to use the Trowel Arm Adjustment Fixture (P/N 9177) . It comes with all the hardware necessary to properly accomplish this maintenance and instructions on how to utilize this tool.

If a trowel arm adjustment fixture is not available and immediate adjustment is necessary, temporary field adjustment can be made if you can see or feel which blade is pulling harder by adjusting the bolt that corresponds to that blade.

A better way to determine which blades need adjustment is to place the machine on a known **FLAT** surface (steel metal plate) and pitch the blades as flat as possible. Look at the adjustment bolts. They should all barely make contact with the lower wear plate on the spider. If you can see that one of them is not making contact, some adjustment will be necessary.

Adjust the "high" bolts down to the level of the one that is not touching, or adjust the "low" bolt up to the level of the higher ones. If possible, adjust the low bolt up to the level of the rest of the bolts. This is the fastest way, but may not always work. Verify after adjustment the blades pitch correctly.

Blades that are incorrectly adjusted often will not be able to pitch flat. This can occur if the adjusting bolts are raised too high. Conversely, adjusting bolts that are too low will not allow the blades to be pitched high enough for finishing operations.

If, after making Blade Pitch adjustments the machine is still finishing poorly, blades, trowel arms, and trowel arm bushings may be suspect and should be looked at for adjustment, wear, or damage. See the following sections.

Changing Blades

It is recommended that **ALL** the blades on the entire machine are changed at the same time. If only one or some of the blades are changed, the machine will not finish concrete consistently and the machine may wobble or bounce.

1. Place the machine on a flat, level surface. Adjust the blade pitch control to make the blades as flat as possible. Note the blade orientation on the trowel arm. This is important for ride-on trowels as the two sets of blades counter-rotate. Lift the machine up, placing blocks under the main guard ring to support it.
2. Remove the bolts and lock washers on the trowel arm, and then remove the blade.
3. Scrape all concrete and debris from the trowel arm. This is important to properly seat the new blade.
4. Install the new blade, maintaining the proper orientation for direction of rotation.
5. Reinstall the bolts and lock washers.
6. Repeat steps 2-5 for all remaining blades.

Clean-Up

Never allow concrete to harden on the power trowel. Immediately after use wash any concrete off the trowel with water, be careful not to spray a hot engine or muffler. An old paint brush or broom may help loosen any concrete that has started to harden.

Trowel Arm Adjustment

Use the following procedure to check and adjust trowel arms, and check for worn or damaged components when it becomes apparent that the trowel is finishing poorly or in need of routine maintenance.

Look for the following indications. Trowel arm alignment, worn spider bushings or bent trowel arms may the cause.

- Are blades wearing unevenly? Is one blade completely worn out while the others look new?
- Does the machine have a perceptible rolling or bouncing motion when in use?
- Look at the machine while it is running; do the guard rings "rock up and down" relative to the ground?

1. Place the trowel in a **FLAT**, **LEVEL** area.

A ***level***, clean area to test the trowel prior to and after is essential. Any unlevel ***spots*** in the floor or debris under the trowel blades will give an incorrect perception of adjustment. Ideally, a 5 x 5 Ft. (1.5 x 1.5 Meter) three-quarter inch (19 mm) thick ***FLAT*** steel plate should be used for testing.

2. Pitch the blades as flat as possible. The ***adjustment bolts*** should all barely make contact with the ***lower wear plate*** on the spider. If one is not making contact, adjustment will be necessary. (Item 1, Figure 39).

Figure 39 illustrates, "***incorrect alignment", worn spider bushings or bent trowel arms***. Check that the adjustment bolt is barely touching (0.10" max. clearance) lower wear plate. All alignment bolts should be spaced the same distance from the lower wear plate.

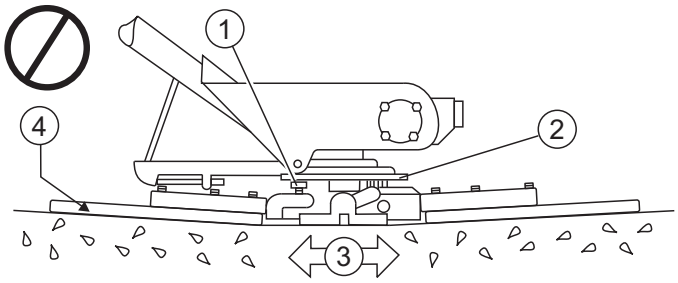

1 **Adjustment Bolt**
2 **Lower Wear Plate**
3 **Surface**
4 **"Dished" Effect on Finished Concrete**

Figure 39. Incorrect Spider Plate Alignment

Figure 40 illustrates the "***correct alignment***" for a spider plate (as shipped from the factory).

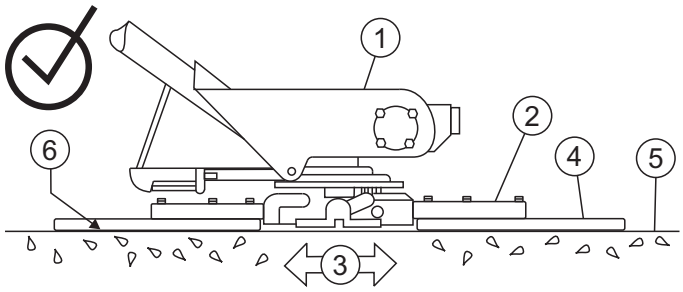

1	**Gearbox**	4	**Mounting Bar**
2	**Trowel Arm**	5	**Blade**
3	**Surface**	6	**Correct Alignment**

Figure 40. Correct Spider Plate Alignment

Spider Removal

Remove the spider assembly from the gearbox shaft as follows:

1. Locate the cone point square head set screw (Figure 41) and attached jam nut found on the side of the spider assembly.
2. Loosen the jam nut and cone point square head set screw.
3. Carefully lift the ***upper trowel assembly*** off of the spider assembly. A slight tap with a rubber mallet may be necessary to dislodge the spider from the main shaft of the gearbox.

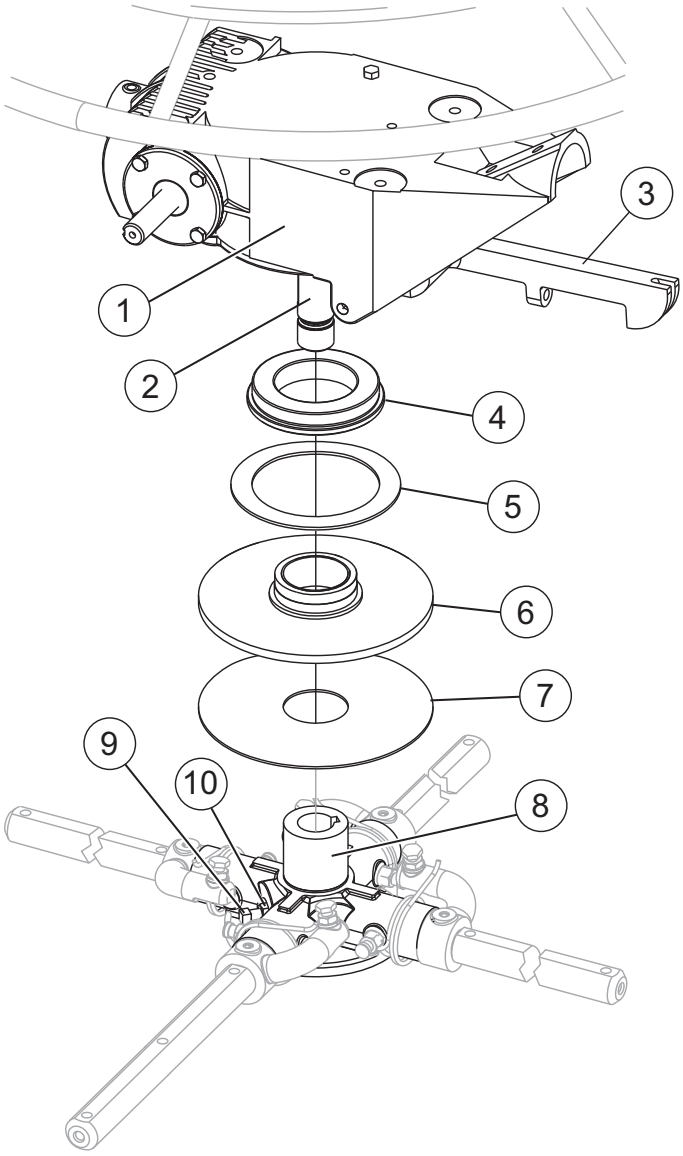

1	**Gearbox**
2	**Gearbox Shaft**
3	**Yoke Arm**
4	**Thrust Collar Bearing**
5	**Wear Ring**
6	**Thrust Collar w/Bushing**
7	**Lower Wear Plate**
8	**Spider Plate**
9	**Set Screw, (Cone Point, Square Head)**
10	**Jam Nut**

Figure 41. Spider/Gearbox Removal

Trowel Blade Removal

Remove the trowel blades by removing the three hex head bolts (Figure 42) from the trowel arm. Set blades aside.

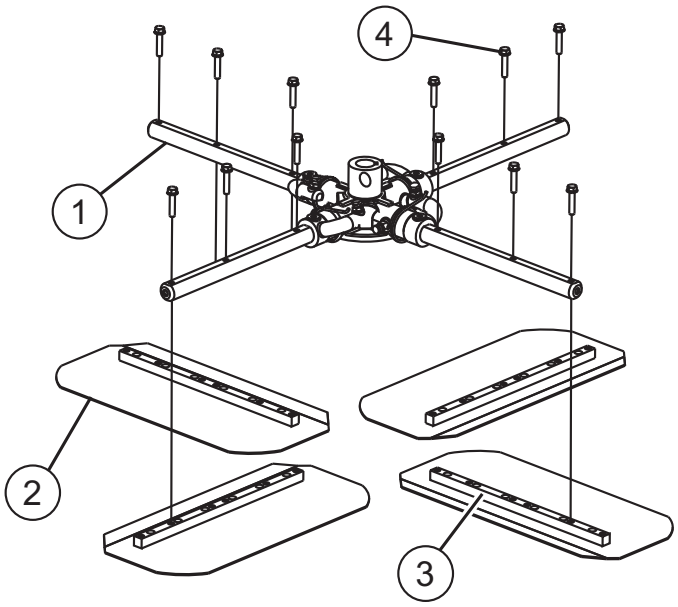

1 **Trowel Arm**
2 **Trowel Blade**
3 **Blade Attachment Bar**
4 **Blade Attachment Screw**

Figure 42. Trowel Blades

Trowel Arm Removal

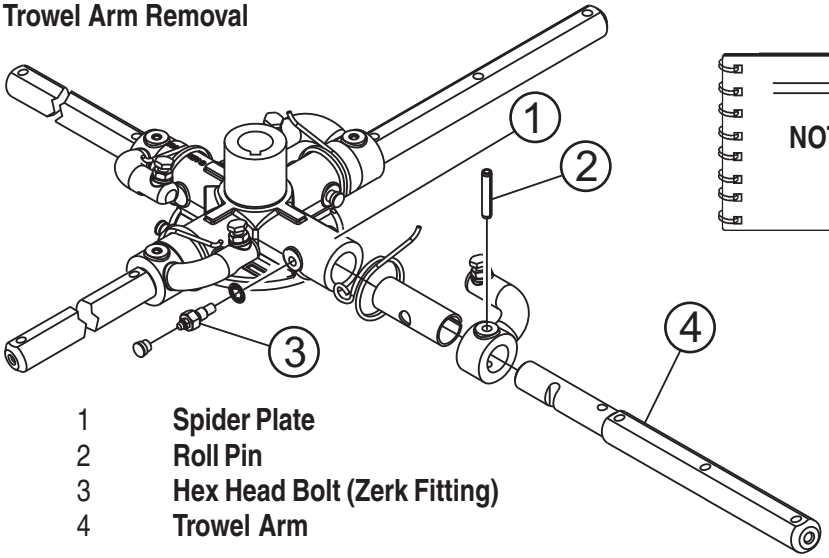

1 **Spider Plate**
2 **Roll Pin**
3 **Hex Head Bolt (Zerk Fitting)**
4 **Trowel Arm**

Figure 43. Removing Roll Pin and Zerk Grease Fitting

1. Each trowel arm is held in place at the spider plate by a hex head bolt (zerk grease fitting) and a roll pin. Remove both the hex head bolt and the roll pin (Figure 43) from the spider plate.
2. Remove the trowel arm from the spider plate.
3. Should the trowel arm inserts (bushing) come out with the trowel arm, remove the bushing from the trowel arm and set aside in a safe place. If the bushing is retained inside the spider plate, carefully remove the bushing.
4. Examine the trowel arm bushing insert (Figure 44), clean if necessary. Replace bushing if out of round or worn.

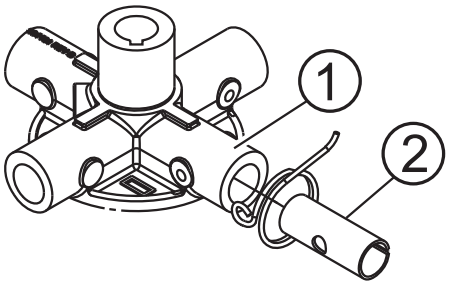

1 **Spider Plate**
2 **Bushing**

Figure 44. Trowel Arm Bushings

2. ***Wire brush*** any build-up of concrete from all sides of the trowel arm. Repeat this for the remaining three arms.

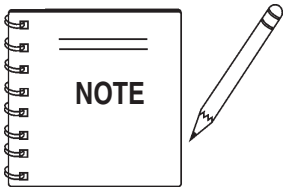

This trowel is shipped with durable semi-round trowel arms. Hexagonal arms of the same length are interchangeable.

Checking Trowel Arm Straightness

Trowel arms can be damaged by rough handling, (such as dropping the trowel on the pad), or by striking exposed plumbing, forms, or rebar while in operation. A bent trowel arm will not allow the trowel to operate in a smooth fluid rotation. If bent trowel arms are suspect, check for flatness as follows, refer to Figures 45 and 46:

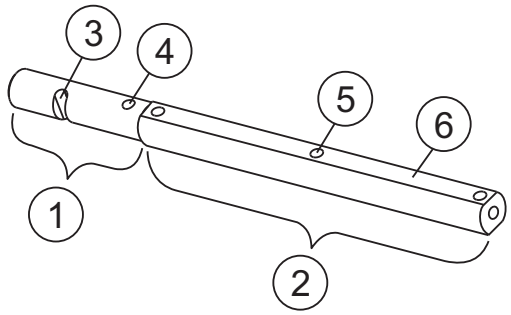

1 **Trowel Arm Round Shaft Section**
2 **Trowel Arm Semi-Round Shaft Section**
3 **Lever Mounting Slot (Left Arm Shown)**
4 **Roll Pin Hole**
5 **Blade Attachment Bolt Hole (One of Three)**
6 **Flat of Semi-Round Shaft (Top of Arm)**

Figure 45. Trowel Arm

1. Use a thick steel plate, granite slab or any surface which is ***true*** and ***flat***, to check all sides of each trowel arm for flatness.
2. Check each of the sides of the trowel arm (flat section). A feeler gauge of .004" (0.10 mm) should not pass between the flat of the trowel arm and the test surface along its length on the test surface. (Figure 46 item 3) .

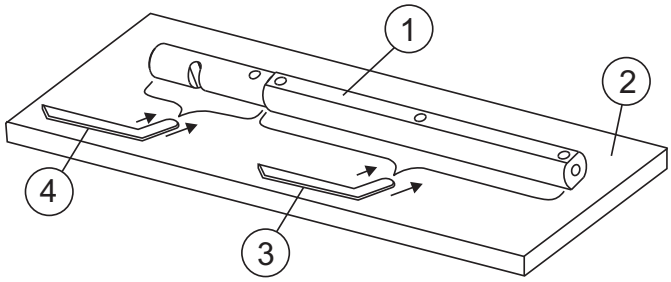

1 **Trowel Arm**
2 **Flat Test Surface**
3 **Feeler Gauge (.004 in. / 0.10 mm)**
4 **Feeler Gauge (.005 in. / 0.127 mm)**

Figure 46. Checking Trowel Arm Flatness

3. Next, check the clearance between the round shaft and the test surface as one of the flat hex sections of the arm rests on the test surface. Rotate the arm to each of the flat hex sections and check the clearance of the round shaft. Use a feeler gauge of .005" (0.127 mm). Each section should have the ***same clearance*** between the round of the trowel arm shaft and the test surface.
4. If the trowel arm is found to be ***uneven*** or ***bent***, replace the trowel arm.

Trowel Arm Adjustment

Shown in (Figure 47) is the adjustment fixture with a trowel arm inserted. As each trowel arm is locked into the fixture, the arm bolt is adjusted to where it contacts a stop on the fixture. This will consistently adjust all of the trowel arms, keeping the finisher as flat and evenly pitched as possible.

1. Locate the trowel arm adjustment tool P/N 9177.

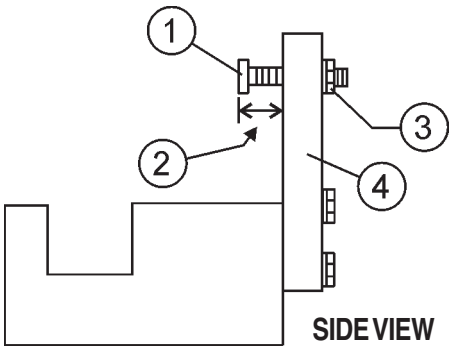

1 **Adjustment Bolt**
2 **"Distance"**
3 **Locking Nut**
4 **Fixture Arm**

Figure 47. Trowel Arm Adjustment Tool Side View

2. Ensure the fixture arm is in the proper setting (up or down) for your trowel arm rotation as shown in Figure 48.

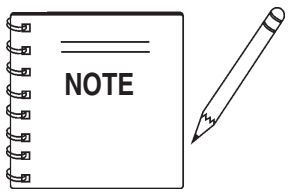

Arms with CLOCK-WISE blade rotation use the fixture arm in the UP position (A in Figure 40). Arms with COUNTER CLOCK-WISE blade rotation use the fixture with the fixture arm in the DOWN position. (B in Figure 48).

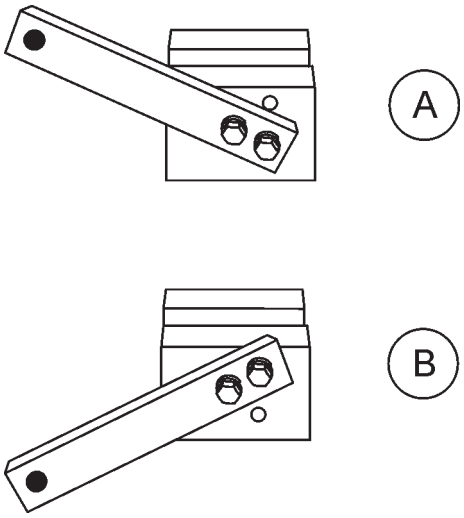

Figure 48. Trowel Arm Adjustment Setup

3. Unscrew the locking bolts on the adjustment tool and place the trowel arm into the fixture channel as shown in Figure 49 A **thin shim** may be required to cover the blade holes on the trowel arm. Make sure to align the **trowel** adjustment bolt with the **fixture** adjustment bolt.

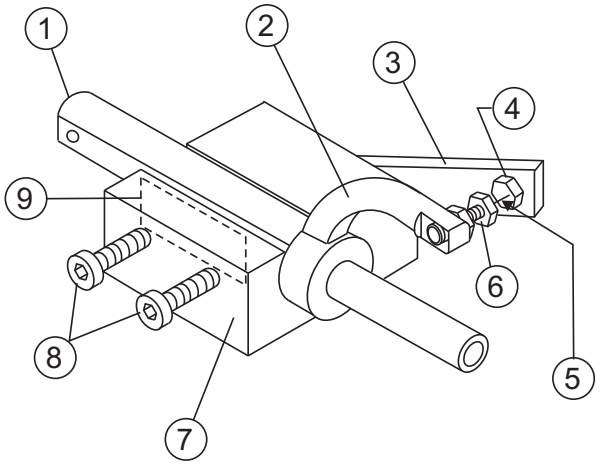

1	**Arm**
2	**Trowel Arm Lever**
3	**Fixture Arm**
4	**Adjustment Bolt**
5	**Distance = .010 Inch**
6	**Adjustment Bolt**
7	**Trowel Arm Adjustment Fixture**
8	**Locking Bolts**
9	**Shim**

Figure 49. Trowel Arm Adjustment Fixture Components

4. Use an allen wrench to tighten the locking bolts securing the trowel arm in place.
5. Adjust the bolt "distance" shown in Figure 49 to match one of the arms. The other arms will be adjusted to match this distance.
6. Loosen the locking nut on the trowel arm lever, then turn the trowel arm adjusting bolt until it barely touches (.010") the fixture adjusting bolt.
7. Once the correct adjustment is made, tighten the lock nut on the trowel arm to lock in place.
8. Loosen locking nuts on the adjustment fixture, and remove trowel arm.
9. Repeat steps for the remaining trowel arms.

Re-Assembly

1. Clean and examine the upper/lower wear plates and thrust collar. Examine the entire spider assembly. Wire brush any concrete or rust build-up. If any of the spider components are found to be damaged or out of round, replace them.
2. Make sure that the bronze trowel arm bushing is not damage or out of round. Clean the bushing if necessary. If the bronze bushing is damaged or worn, replace it.
3. Reinstall bronze bushing onto trowel arm.
4. Repeat steps 2 -3 for each trowel arm.
5. Make sure that the spring tensioner is in the correct position to exert tension on the trowel arm.
6. Insert all trowel arms with levers into spider plate (with bronze bushing already installed) using care to align grease hole on bronze bushing with grease hole fitting on spider plate.
7. Lock trowel arms in place by tightening the hex head bolt with zerk grease fitting and jam nut.
8. Re-install the blades onto the trowel arms.
9. Install stabilizer ring onto spider assembly.
10. Reinstall **lower wear plate**, ***thrust collar*** and ***upper wear ring*** in the ***reverse order*** that they were dis-assembled onto the spider shaft. Make sure that there is little or no lateral movement between the thrust collar and the spider shaft.

11. Carefully lift *the* ***upper trowel assembly***, line up the key-way on gear box main shaft and insert into spider assembly.

12. Reinstall square head cone point into spider plate and tighten in place. Tighten jam nut. Use care in making sure point of set screw engages groove in gear box main shaft.

13. Lubricate all grease points (zerk fittings) with premium "***Lithum 12"*** based grease, conforming to NLG1 Grade #2 consistency.

Testing

1. Place trowel in test area, start engine and test trowel for smoothness.

2. If trowel bounces has excessive vibration or does not run smoothly repeat alignment procedure.

Installing Pans Onto Finisher Blades

These round discs sometimes referred to as "pans" attach to the spiders arms and allow early floating on wet concrete and easy movement from wet to dry areas. They are also very effective in embedding large aggregates and surface hardeners.

WARNING

ALWAYS install pans either on the work area or on an area that is next to and level with the work area. **DO NOT** lift the trowel when the pans are attached.

Refer to Figure 50 when installing pans onto finisher blades.

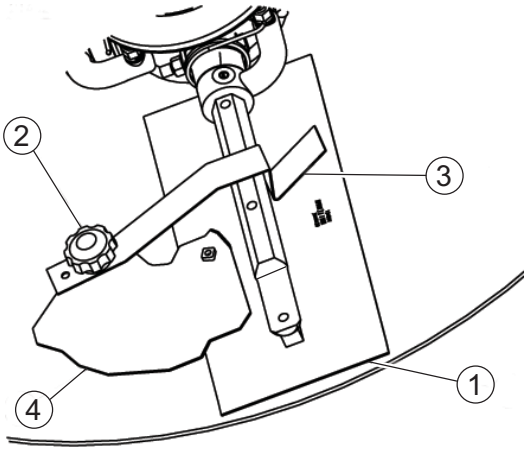

1 **Blade Assembly**
2 **Knob, Tie-Down Z-Clip Pans**
3 **Tie-Down, Blade**
4 **Z-Clip, Pan**

Figure 50. Pan Installation

1. Lift trowel just enough to slide pan under blades. Lower finisher onto pan with blades (item #1) adjacent to Z-Clips (item #4).

2. Rotate blades into position under Z-Clips. Ensure that the blades are rotated in the direction of travel when the machine is in operation or use the engine to rotate the blades into position.

3. Attach the blade tie-downs (item #3) to the far side of the Z-Clip brackets (item #4) with tie-down knobs (item #2) as shown in figure 51.

4. Check to make certain that the blade edges are secured under the Z-Clips and the tie-downs are secured completely over the edges of the blade bar before the machine is put back into operation.

Decommissioning Trowel/Components

Decommissioning is a controlled process used to safely retire a piece of equipment that is no longer serviceable. If the equipment poses an unacceptable and unrepairable safety risk due to wear or damage or is no longer cost effective to maintain, (beyond life-cycle reliability) and is to be decommissioned, (demolition and dismantlement), the following procedure must take place:

1. Drain all fluids completely. These may include oil, gasoline, hydraulic oil and antifreeze. Dispose of properly in accordance with local and governmental regulations. Never pour on ground or dump down drains or sewers.

2. The remainder can be brought to a salvage yard or metal reclamation facility for further dismantling.

TABLE 6. TROUBLESHOOTING		
SYMPTOM	**POSSIBLE PROBLEM**	**SOLUTION**
Engine running rough or not at all.	Engine ON/OFF Switch in "OFF" position or malfunctioning?	Make sure that the Engine ON/OFF Switch is the "ON" position. Check contacts. Replace switch if necessary.
	Fuel?	Look at the fuel system. Make sure there is fuel being supplied to the engine. Check to ensure that the fuel filter is not clogged.
	Ignition?	Check that the ignition switch has power and is functionin correctly.
	Loose wire connections?	Check wiring. Replace or repair as necessary.
	"Kill" Switch malfunction?	Ensure switch is in the "ON" position. Check wiring/connections. Check contacts. Replace switch if defective.
If trowel “bounces, rolls concrete, or makes uneven swirls in concrete”.	Blades?	Make certain blades are in good condition, not excessively worn. Finish blades should measure no less than 2" (50mm) from the blade bar to the trailing edge, combo blades should measure no less that 3.5" (89mm). Trailing edge of blade should be straight and parallel to the blade bar.
	Pitch adjustment?	Check that all blades are set at the same pitch angle as measured at the spider. A field adjustment tool is available for height adjustment of the trowel arms. (Contact Parts Dept.)
	Bent trowel arms?	Check the spider assembly for bent trowel arms. If one of the arms is even slightly bent, replace it immediately.
	Spider?	Check fit of arms in spider. This can be done by moving the trowel arms up and down. If there is more than 1/8" (3.2 mm) of travel at the tip of the arm, the spider and arms should be replaced.
	Thrust collar?	Check the flatness of the thrust collar by rotating it on the spider. If it varies by more than 0.02" (0.5 mm) replace the thrust collar.
	Thrust collar?	Check the thrust collar by rocking it on the spider. If it can tilt more than 3/32" (2.4 mm) [as measured at the thrust collar O.D.], replace the thrust collar.
	Thrust bearing worn?	Check the thrust bearing to see that it is spinning free. Replace if necessary.
Machine has a perceptible rolling motion while running.	Main shaft?	The main output shaft of the gearbox assembly should be checked for straightness. The main shaft must run straight and cannot be more than 0.003" (0.08 mm) out of round at the spider attachment point.
	Yoke?	Check to make sure that both fingers of the yoke press evenly on the wear cap. Replace yoke as necessary.
	Blade Pitch?	Check to ensure that each blade is adjusted to have the same pitch as all other blades. Adjust per maintenance section in manual.

TABLE 6. TROUBLESHOOTING (CONTINUED)		
SYMPTOM	**POSSIBLE PROBLEM**	**SOLUTION**
Clutch slipping or sluggish response to engine speed change.	Worn V-belts?	Replace V-belt.
	Dirty centrifugal clutch?	Disassemble and clean clutch.
	Defective or worn out centrifugal clutch?	Replace entire clutch.
	Worn bearings in gearbox?	Rotate input shaft by hand. If shaft rotates with difficulty, check the input and output shaft bearings. Replace as necessary.
	Worn or broken gears in gearbox?	Verify that the gearbox shaft rotates when the input shaft is rotated. Replace both the worm and worm gear as a set.

TABLE 7. TROUBLESHOOTING (ENGINE)		
SYMPTOM	**POSSIBLE CAUSE**	**SOLUTION**
Difficult to start, "fuel is available, but no SPARK at spark plug".	Spark plug bridging?	Check gap, insulation or replace spark plug.
	Carbon deposit on spark plug?	Clean or replace spark plug.
	Short circuit due to deficient spark plug insulation?	Check spark plug insulation, replace if worn.
	Improper spark plug gap?	Set to proper gap.
Difficult to start, "fuel is available, and SPARK is present at the spark plug".	ON/OFF switch is shorted?	Check switch wiring, replace switch.
	Ignition coil defective?	Replace ignition coil.
	Improper spark gap, points dirty?	Set correct spark gap and clean points.
	Condenser insulation worn or short circuiting?	Replace condenser.
	Spark plug wire broken or short circuiting?	Replace defective spark plug wiring.
Difficult to start, "fuel is available, spark is present and compression is normal".	Wrong fuel type?	Flush fuel system, and replace with correct type of fuel.
	Water or dust in fuel system?	Flush fuel system.
	Air cleaner dirty?	Clean or replace air cleaner.
	Choke Open? (Engine cold)	Close Choke.
	Choke Closed? (Engine warm)	Open Choke.
Difficult to start, "fuel is available, spark is present and compression is low".	Suction/exhaust valve stuck or protruded?	Re-seat valves.
	Piston ring and/or cylinder worn?	Replace piston rings and or piston.
	Cylinder head and/or spark plug not tightened properly?	Torque cylinder head bolts and spark plug.
	Head gasket and/or spark plug gasket damaged?	Replace head and spark plug gaskets.
No fuel present inside priming bulb.	Fuel not available in fuel tank?	Fill with correct type of fuel.
	Fuel filter clogged?	Replace fuel filter.
	Fuel tank cap breather hole clogged?	Clean or replace fuel tank cap.
	Air in fuel line?	Bleed fuel line.

EXPLANATION OF CODES IN REMARKS COLUMN

The following section explains the different symbols and remarks used in the Parts section of this manual. Use the help numbers found on the back page of the manual if there are any questions.

NOTICE

The contents and part numbers listed in the parts section are subject to change **without notice**. Multiquip does not guarantee the availability of the parts listed.

SAMPLE PARTS LIST

NO.	PART NO.	PART NAME	QTY.	REMARKS
1	12345	BOLT	1	INCLUDES ITEMS W/%
2%		WASHER, 1/4 IN		NOT SOLD SEPARATELY
2%	12347	WASHER, 3/8 IN	1	MQ-45T ONLY
3	12348	HOSE	A/R	MAKE LOCALLY
4	12349	BEARING	1	S/N 2345B AND ABOVE

NO. Column

Unique Symbols — All items with same unique symbol

(@, #, +, %, or >) in the number column belong to the same assembly or kit, which is indicated by a note in the "Remarks" column.

Duplicate Item Numbers — Duplicate numbers indicate multiple part numbers, which are in effect for the same general item, such as different size saw blade guards in use or a part that has been updated on newer versions of the same machine.

NOTICE

When ordering a part that has more than one item number listed, check the remarks column for help in determining the proper part to order.

PART NO. Column

Numbers Used — Part numbers can be indicated by a number, a blank entry, or TBD.

TBD (To Be Determined) is generally used to show a part that has not been assigned a formal part number at the time of publication.

A blank entry generally indicates that the item is not sold separately or is not sold by Multiquip. Other entries will be clarified in the "Remarks" Column.

QTY. Column

Numbers Used — Item quantity can be indicated by a number, a blank entry, or A/R.

A/R (As Required) is generally used for hoses or other parts that are sold in bulk and cut to length.

A blank entry generally indicates that the item is not sold separately. Other entries will be clarified in the "Remarks" Column.

REMARKS Column

Some of the most common notes found in the "Remarks" Column are listed below. Other additional notes needed to describe the item can also be shown.

Assembly/Kit — All items on the parts list with the same unique symbol will be included when this item is purchased.

Indicated by:

"INCLUDES ITEMS W/(unique symbol)"

Serial Number Break — Used to list an effective serial number range where a particular part is used.

Indicated by:

"S/N XXXXX AND BELOW"
"S/N XXXX AND ABOVE"
"S/N XXXX TO S/N XXX"

Specific Model Number Use — Indicates that the part is used only with the specific model number or model number variant listed. It can also be used to show a part is NOT used on a specific model or model number variant.

Indicated by:

"XXXXX ONLY"
"NOT USED ON XXXX"

"Make/Obtain Locally" — Indicates that the part can be purchased at any hardware shop or made out of available items. Examples include battery cables, shims, and certain washers and nuts.

"Not Sold Separately" — Indicates that an item cannot be purchased as a separate item and is either part of an assembly/kit that can be purchased, or is not available for sale through Multiquip.

B-46 TROWEL 1 TO 3 UNITS WITH HONDA GX270UTQA2 GASOLINE ENGINE.

1 to 3 Units

Qty.	P/N	Description
2	20478	GRIP, HANDLE
1	21046	GASKET/SEAL KIT
1	21047	BEARING KIT
1	20285	PITCH CABLE (STANDARD HANDLE)
1	20297	PITCH CABLE (QPHAFC HANDLE)
1	21172	THROTTLE CABLE
1	12778	THRUST BEARING
1	10793	THRUST COLLAR
1	1154 A	WEAR PLATE
3	0152 3	V-BELT A-28
2	10139	GEARBOX LUBRICANT
2	9807955876	SPARK PLUG, BPR5ES
2	28462ZE2W11	ROPE RECOIL STARTER
2	17620Z0T813	CAP, FUEL WITH GASKET
3	17210ZE2822	ELEMENT, AIR CLEANER
2	17218ZE2821	OUTER FOAM FILTER

B-46 TROWEL 1 TO 3 UNITS WITH ROBIN EX-270D50020 GASOLINE ENGINE.

1 to 3 Units

Qty.	P/N	Description
2	20478	GRIP, RIGHT
1	21046	GASKET/SEAL KIT
1	21047	BEARING KIT
1	20301	PITCH CABLE (STANDARD HANDLE)
1	20271	PITCH CABLE (QPHAFC HANDLE)
1	21172	THROTTLE CABLE
1	12778	THRUST BEARING
1	10793	THRUST COLLAR
1	1154 A	WEAR PLATE
3	0152 3	V-BELT A-28
2	10139	GEARBOX LUBRICANT
2	0650140150	SPARK PLUG, NK6 BR6HS
2	2795011008	ROPE RECOIL STARTER
2	0430430060	CAP, FUEL
3	2793260707	AIR CLEANER ELEMENT
2	2793260308	OUTER FOAM FILTER

B-46 TROWEL 1 TO 3 UNITS WITH HONDA GX340U1QAP2 GASOLINE ENGINE.

1 to 3 Units

Qty.	P/N	Description
2	20478	GRIP, HANDLE
1	21046	GASKET/SEAL KIT
1	21047	BEARING KIT
1	20301	PITCH CABLE (STANDARD HANDLE)
1	20271	PITCH CABLE (QPHAFC HANDLE)
1	21172	THROTTLE CABLE
1	12778	THRUST BEARING
1	10793	THRUST COLLAR
1	1154 A	WEAR PLATE
3	0152 3	V-BELT A-28 (B46H11)
3	1243	V-BELT A-27 (B46H11H)
2	10139	GEARBOX LUBRICANT
2	9807955846	SPARK PLUG, BPR5ES
2	28462ZE3W11	ROPE RECOIL STARTER
2	17620Z0T305	CAP, FUEL WITH GASKET
3	17210ZE3010	ELEMENT, AIR CLEANER
2	17218ZE3000	OUTER FOAM FILTER

1 P/N 22070

3 CONTACT PARTS DEPARTMENT

2 P/N 2942 WHITE TEXT 13”

4 P/N 35137

5 P/N 12405
(Quick Pitch Model)

6 P/N 36099 (ISO Blue)

7 P/N 20816

8 P/N: 21455

CAUTION
DO NOT LIFT MACHINERY BY GUARD RING. MAY CAUSE DAMAGE TO GUARD RING SHOCK MOUNTS USE LIFT HANDLES ONLY

9 P/N 1261

WARNING!
DO NOT OPERATE HANDLE UNTIL IT IS SECURELY FASTENED TO POWER TROWEL & INSTRUCTIONS HAVE BEEN READ

10 P/N 20527

11 P/N 35168

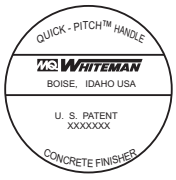

12 P/N 1758

13 CE P/N 11092

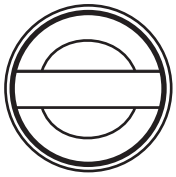

14 P/N: 1492
(STANDARD MODEL)

16

PRELOAD TRIM INDICATOR
FINISH ← J → COMBO FINISH ← B → COMBO

15 P/N 1735

NO.	PART NO.	PART NAME	QTY.	REMARKS
1%	22070	DECAL: MQ/WHITEMAN POWER TROWEL	1	
2	2942	DECAL: MQ WHITEMAN (WHITE TEXT)	1	
3		NAME PLATE	1	CONTACT MULTIQUIP PARTS DEPARTMENT
4%	35137	DECAL: WARNING, READ MANUAL	1	SAFETY ITEM
5	12405	DECAL: WHITEMAN QUICK PITCH	1	
6%	36099	DECAL: HELMET, SHOE AND GLOVE	1	SAFETY ITEM
7%	20816	DECAL: MULTIQUIP	1	
8%	21455	DECAL: WARNING, LIFT/CRUSH HAZARD	1	SAFETY ITEM
9	1261	DECAL: CAUTION USE LIFT HANDLES	1	SAFETY ITEM
10	20527	DECAL: WARNING HANDLE	1	SAFETY ITEM
11%	35168	DECAL: WARNING, BLADE RISK	1	SAFETY ITEM
12	1758	DECAL: QUICK PITCH PATENT	1	
13%	11092	DECAL: CE	1	
14	1492	DECAL: FINISHER HANDLE	1	
15	1735	DECAL: PRELOAD TRIM INDICATOR	1	
16	22038	DECAL, KIT	1	INCLUDES ITEMS W/%

STANDARD HANDLE ASSY. (07/29/07 AND BELOW)

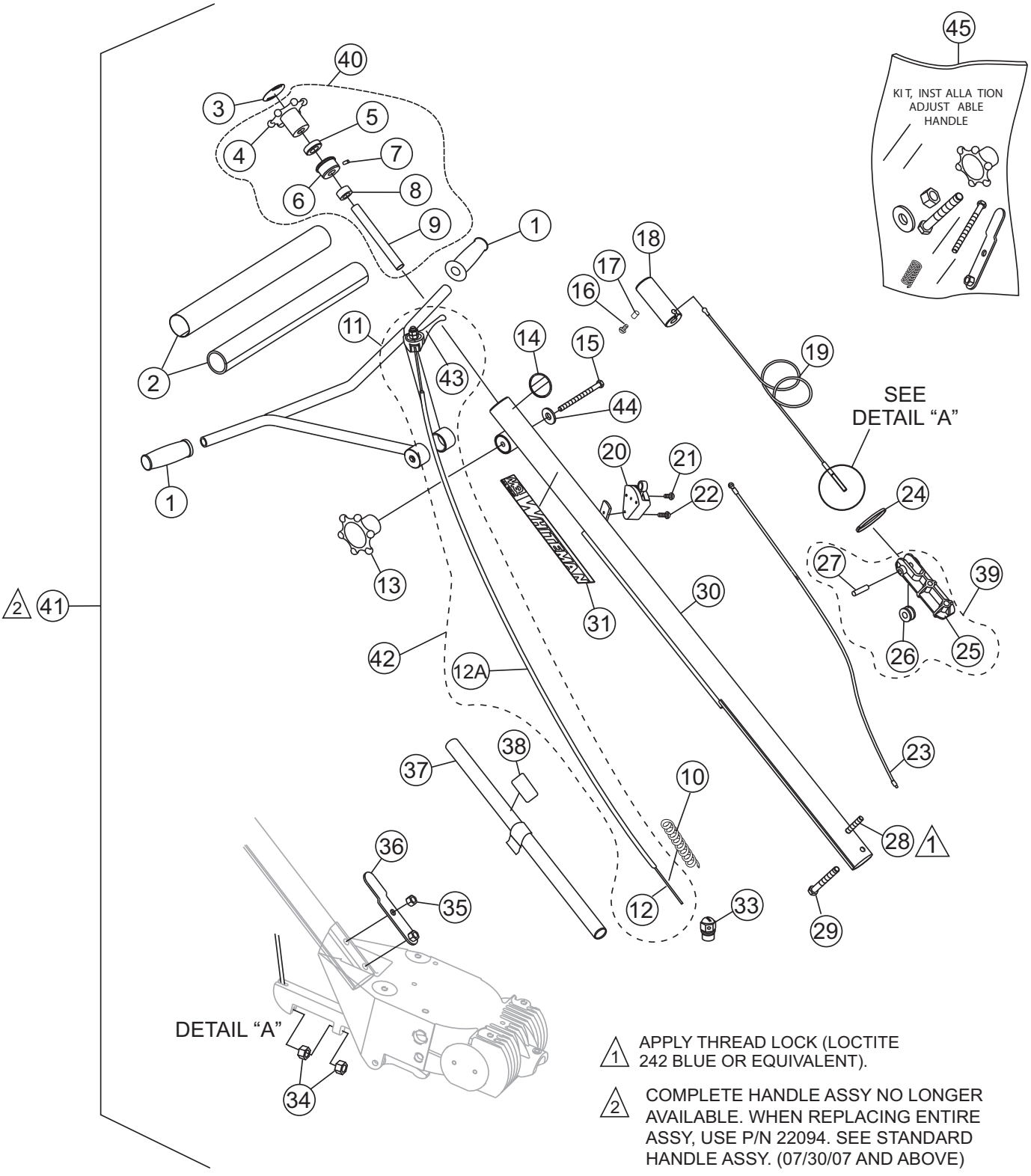

STANDARD HANDLE ASSY. (07/29/07 AND BELOW)

NO.	PART NO.	PART NAME	QTY.	REMARKS
1	20478	GRIP, HANDLE	2	
2	20774	COVER, PAD HANDLE	1	
3	20818	DECAL, STD PITCH	1	OBSOLETE ON LATER MODELS
4*	20817	WHEEL, HAND HANDLE	1	
5*	0281	BEARING, THRUST, NICE 607	1	
6*	20282	BEARING, TROWEL CONTROL	1	
7*	0122C	SCREW, SHS 3/8-16 X 1/2	1	
8*	3615	COLLAR, SET 3/4 ID	1	
9*	1478	SHAFT, TROWEL CONTROL	1	
10>	21746	SPRING, THROTTLE	1	
11	12556	HANDLE, ADJUSTABLE	1	
12+	21172	THROTTLE CABLE	1	
12A+	21173	HOUSING, CABLE 74”	1	
13>	20439	WHEEL ASSY., HAND	1	
14	1492	DECAL, CUSTOM 2-1/2 CHROME	1	
15>	20438	SCREW, HHC 3/8-16 X 5.00	1	
16	0786	SCREW, BHC 1/4- 20 X 3/8 NYL PATCH, NP	1	
17	0786A	SPACER, .360 X 17/64 X 1/8L	1	
18	20287	SLIDE BLOCK TROWEL CONTROL	1	
19	20285	CABLE ASSY., LENGTH 48.29” STD FINISHER	1	
20	20856	SWITCH ASSY., SAFETY "KILL" STOP	1	INCLUDES ITEM W/%
21%	1602	SCREW, RHM 10-24 X 3/8	1	
22	20988	SCREW, FHSC PHILLIPS 8-32 X 1-1/4	1	
23	20514	WIRE ASSY., SAFETY STOP "KILL" SWITCH	1	
24	1662	TIE, CABLE TY-RAP, BLACK	1	
25#	20275	BLOCK, SUPPORT	1	
26#	1118	PULLEY, SUPPORT BLOCK	1	
27#	20279	PIN, SUPPORT BLOCK 3/8 X 1.59	1	
28	21017	SCREW, HHC 3/8-16 X 3-1/4 FULL THREAD	1	
29>	1493	SCREW, HHC 3/8-16 X 3-1/4	1	
30	12567	HANDLE, STD	1	
31	2942	DECAL, MQ MULTIQUIP, 13”	1	
33	20845	SWIVEL, THROTTLE CABLE	1	HONDA ENGINE ONLY
34	1116	NUT, BRASS JAM 5/16-18	2	
35>	10133	NUT, NYLOC 3/8-16	1	
36>	20392	BRACKET, LIFT TUBE	1	
37		HANDLE, LIFT ASSY.	1	NO LONGER AVAILABLE
38		DECAL, CAUTION, LIFT HANDLE	1	NO LONGER AVAILABLE
39	20280	BLOCK, CABLE ASSY.	1	INCLUDES ITEMS W/#
40	20819	HAND WHEEL ASSY., PITCH CONTROL	1	INCLUDES ITEMS W/*
41		HANDLE ASSY, STD FINISHERS	1	NO LONGER AVAILABLE
42	21243	THROTTLE KIT	1	INCLUDES ITEMS W/+
43	21171	THROTTLE LEVER	1	
44>	3233	WASHER, FENDER 1.5 OD X 3/8" ID	1	
45	20493	KIT, INSTALLATION ADJUSTABLE HANDLE	1	INCLUDES ITEMS W/>

STANDARD HANDLE ASSY. (07/30/07 AND ABOVE)

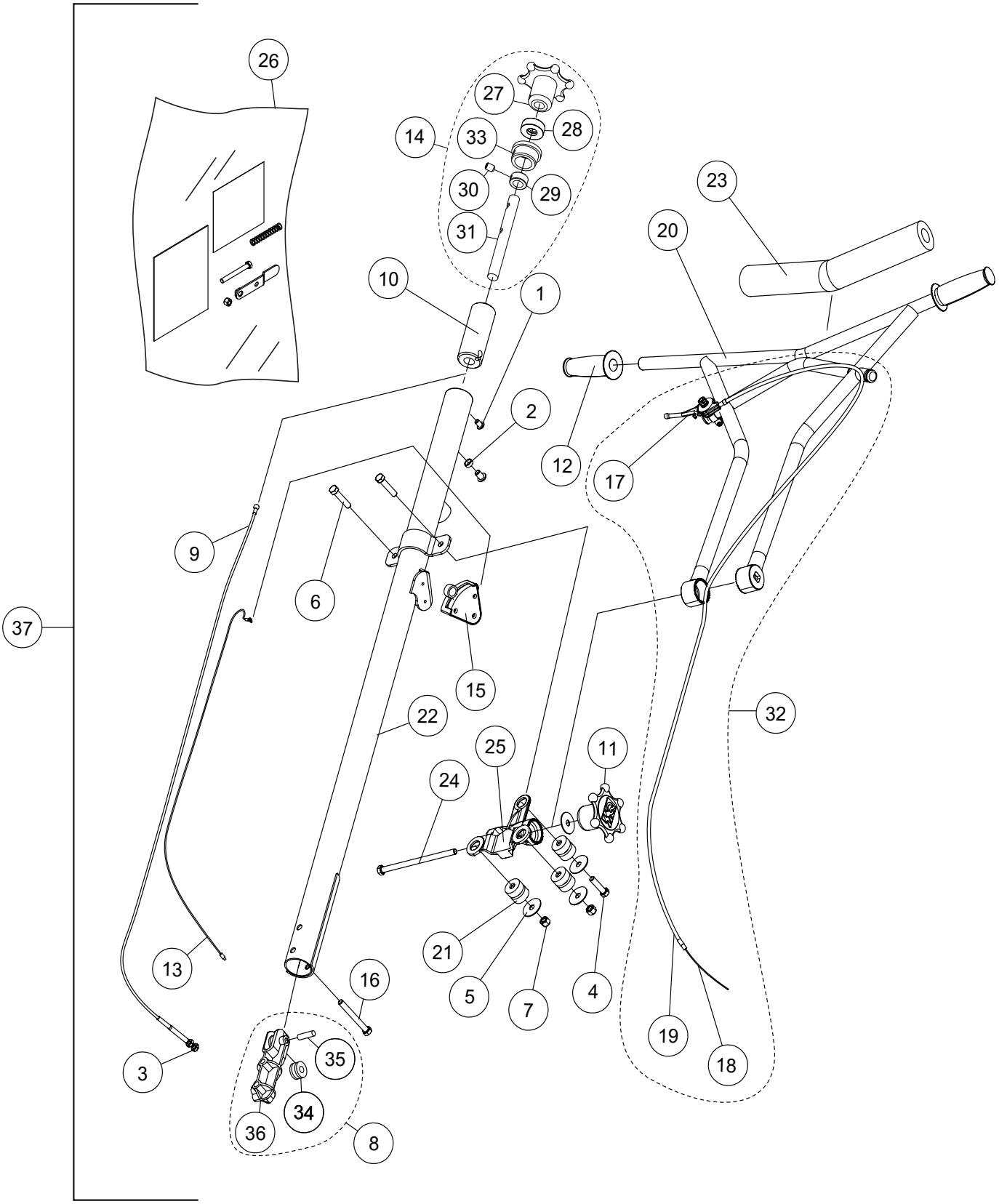

STANDARD HANDLE ASSY. (07/30/07 AND ABOVE)

NO.	PART NO.	PART NAME	QTY.	REMARKS
1#	0786	SCREW, BHC 1/4-20 X 3/8 NYL PATCH ,NP	2	
2#	0786A	SPACER, SLIDE BLOCK GUIDE	1	
3#	1116	NUT, BRASS JAM 5/16-18	2	
4#	1284	SCREW, HHC 3/8-16 X 1 1/2	1	
5#	3233	WASHER, FENDER, 1.5OD X 3/8ID	4	
6#	9154	SCREW, HHC 3/8-16 X 1 3/4	2	
7#	10133	NUT, NYLOC 3/8-16	2	
8#	20280	BLOCK, PITCH CONTROL	1	..... INCLUDES ITEMS W/$
9#	20285	CABLE, CONTROL	1	
10#	20287	SLIDE BLOCK, TROWEL CONTROL	1	
11#	20439	WHEEL ASSY. , HAND	1	
12#	20478	GRIP, HANDLE	2	
13#	20514	WIRE ASSY., KILL SWITCH	1	
14#	20819	HAND WHEEL ASSY, PITCH CONTROL	1	..... INCLUDES ITEMS W/@
15#	20856	SWITCH ASSY., KILL	1	
16#	21017	SCREW, HHC 3/8-16 X 3.25 FULL THRD GR5	1	
17#%	21171	THROTTLE, BICYCLE FINISHER HANDLES	1	
18#%	21172	CABLE, THROTTLE 68”	1	
19#%	21173	HOUSING, MAGURA THROTTLE CABLES	1	
20#	22055	HANDLE WA, VIBRATION CONTROL	1	
21#	22059	ISOLATOR, VIBRATION 80 DUROMETER SHORE A	3	
22#	22095	HANDLE, W/A, STOW FIN VIBE CONTROL	1	
23#	22166	COVER,VIBE CONTROL HANDLE PAD	1	
24#	22167	SCREW, HHC 3/8-16 X 6.5” GRADE 5	1	
25#	22206	CHASSIS, CAST VIBRATION ISOLATOR	1	..... REPLACES P/N 22056
26#	22100	KIT, VIBE CONTROL HANDLE INSTALLATION	1	
27#@	20817	WHEEL, HAND J-B HANDLES	1	
28#@	0281	BEARING, THRUST NICE, 607	1	
29#@	3615	COLLAR, SET 3/4 ID	1	
30#@	0122 C	SCREW, SHS 3/8-16 X 1/2	1	
31#@	1478	SHAFT, TROWEL CONTROL	1	
32#	21243	THROTTLE KIT	1	..... INCLUDES ITEMS W/%
33#@	20282	BEARING, TROWEL CONTROL	1	
34#$	A1808	PULLEY, PITCH CABLE HANDLE	1	
35#$	20279	PIN, SUPPORT BLOCK 3/8 X 1.59	1	
36#$	20275	BLOCK, SUPPORT	1	
37	22094	HANDLE ASSY, STD. VIBE CONTROL	1	..... INCLUDES ITEMS W/#

QUICK PITCH HANDLE ASSY. (07/29/07 AND BELOW)

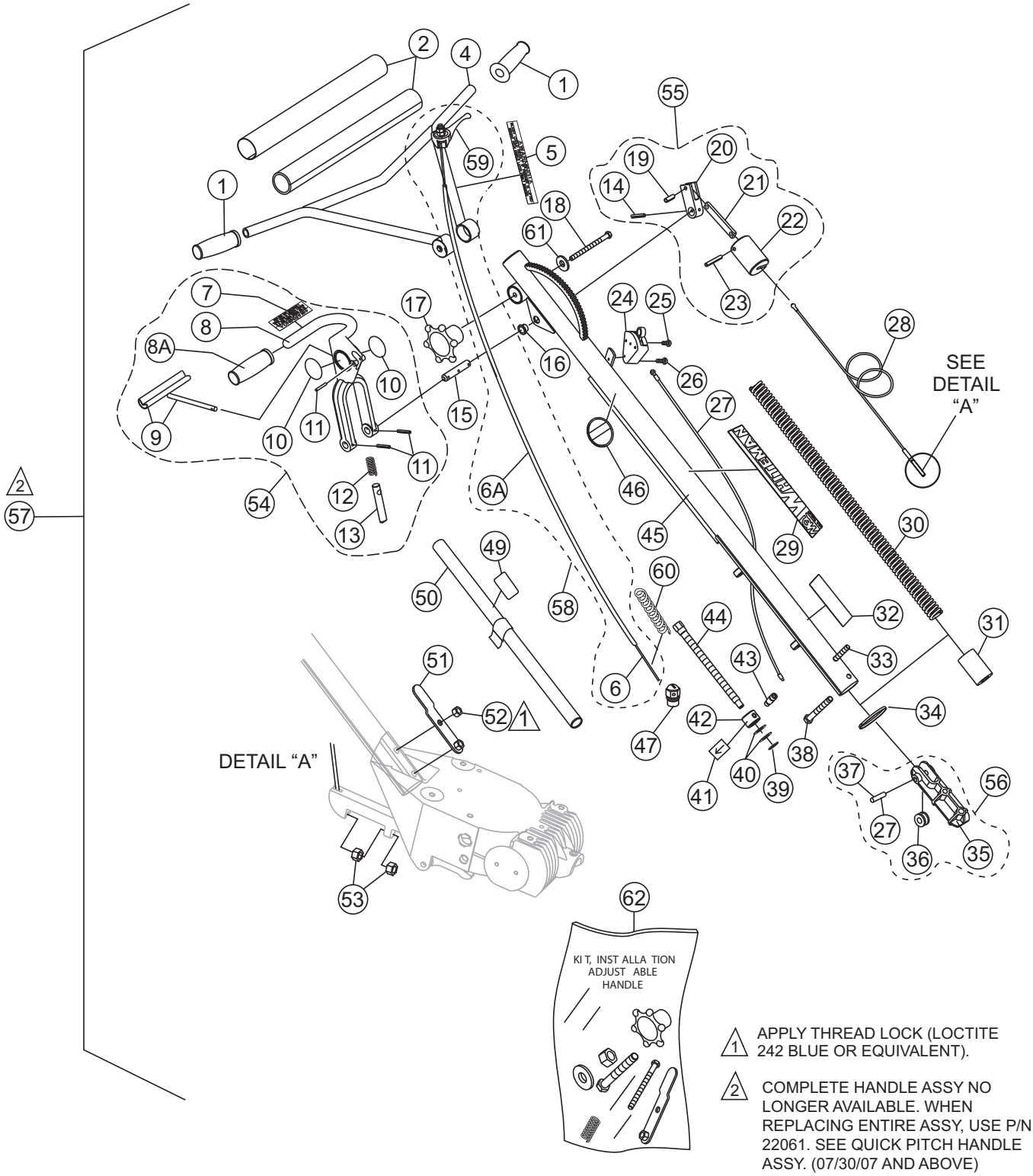

1 APPLY THREAD LOCK (LOCTITE 242 BLUE OR EQUIVALENT).

2 COMPLETE HANDLE ASSY NO LONGER AVAILABLE. WHEN REPLACING ENTIRE ASSY, USE P/N 22061. SEE QUICK PITCH HANDLE ASSY. (07/30/07 AND ABOVE)

QUICK PITCH HANDLE ASSY. (07/29/07 AND BELOW)

NO.	PART NO.	PART NAME	QTY.	REMARKS
1	20478	GRIP, HANDLE	2	
2	20774	COVER, PAD HANDLE	1	
4	12556	HANDLE, ADJUSTABLE	1	
5	20526	DECAL, LATCH WARNING	1	
6 $	21172	CABLE, THROTTLE	1	
6A$	21173	CABLE HOUSING	1	
7	12405	DECAL, Q.P. WARNING	1	
8*	20389	HANDLE, QUICK-PITCH™	1	
9*	1746	TRIGGER, QP CHROMED	1	
10*	20815	DECAL, QUICK-PITCH™	2	
11	1729	PIN, ROLL 3/16 X 1-1/4	3	
12*	1706	SPRING, ENCLOSED QP CLAMP	1	
13*	20437	PIN, QP LATCH	1	
14	4568	PIN, ROLL 3/16 X 1	1	
15	1711	SHAFT, CONTROL QP	1	
16	1719	BUSHING, PIVOT PLATE	1	
17>	20439	WHEEL ASSY., HAND	1	
18>	20438	SCREW, HHC 3/8-16 X 5.00	1	
19+	1731	PIN, ROLL 1/4 X 3/4	1	
20+	20443	ARM, SLIDE CONTROL	1	
21+	1709	CONNECTOR, QP CONTROL ARM	1	
22+	20269	LINKAGE, QP CONTROL	1	
23+	20276	PIN, ROLL 1/4 X 1 3/4	1	
24	20856	SWITCH ASSY., SAFETY "KILL" STOP	1	INCLUDES ITEM W/%
25%	1602	SCREW, RHM 10-24 X 3/8	1	
26	20988	SCREW, FHSC PHILLIPS 8-32 X 1-1/4	1	
27	20514	WIRE ASM, SAFETY STOP SWITCH	1	
28	20297	CABLE ASSY., QP CONTROL, 45”	1	
29	2942	DECAL, MQ MULTIQUIP, 13”	1	
30	1715	SPRING, COUNTER BALANCE	1	
31	20270	BLOCK, QP ADJUSTMENT	1	
32	1735	DECAL, PRELOAD TRIM INDICATOR	1	
33	21017	SCREW, HHC 3/8-16 X 3-1/4 FULL THREAD	1	
34	1662	TIE, CABLE, TY-RAP BLACK	1	
35#	20275	BLOCK, SUPPORT	1	
36#	1118	PULLEY, SUPPORT BLOCK	1	
37#	20279	PIN, SUPPORT BLOCK 3/8 X 1.59	1	
38>	1493	SCREW, HHC 3/8-16 X 3-1/4	1	
39	1737	SNAP RING, TRUARC #5100-50	1	
40	1733	WASHER, 1/2 X 1/32, HARDENED	2	

QUICK PITCH HANDLE ASSY. (07/29/07 AND BELOW)

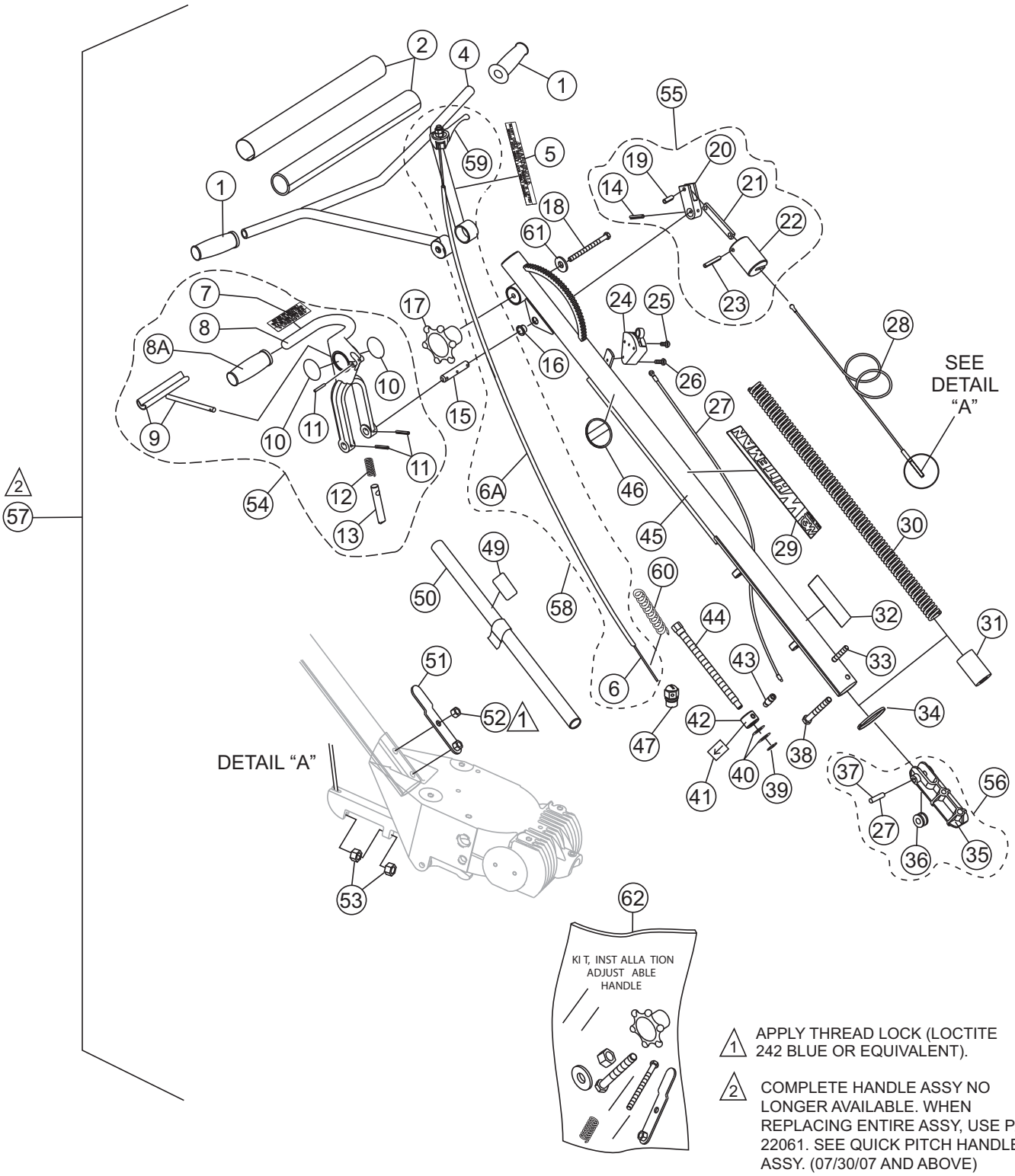

△1 APPLY THREAD LOCK (LOCTITE 242 BLUE OR EQUIVALENT).

△2 COMPLETE HANDLE ASSY NO LONGER AVAILABLE. WHEN REPLACING ENTIRE ASSY, USE P/N 22061. SEE QUICK PITCH HANDLE ASSY. (07/30/07 AND ABOVE)

QUICK PITCH HANDLE ASSY. (07/29/07 AND BELOW)

NO.	PART NO.	PART NAME	QTY.	REMARKS
41	1736	DECAL, ARROW	1	
42	1718	NUT, QP TRIM CONTROL ADJ	1	
43	1732	BOLT, STRIPPER 3/8 X 1/2	1	
44	1717	SCREW, QP TRIM ADJUSTMENT	1	
45	12642	TUBE, MAIN HANDLE	1	
46	1758	DECAL, PATENT QP	1	
47	20845	SWIVEL, ENGINE THROTTLE CABLE	1	..... HONDA ENGINE ONLY
48	21173	HOUSING, THROTTLE CABLE 74”	1	
49		DECAL, CAUTION, LIFT HANDLE	1	..... NO LONGER AVAILABLE
50		HANDLE, LIFT ASSY.	1	..... NO LONGER AVAILABLE
51>	20392	BRACKET, LIFT TUBE	1	
52>	10133	NUT, NYLOC 3/8-16	1	
53	1116	NUT, BRASS JAM 5/16-18	2	
54	20390	TRIGGER, QP ASSY.	1	..... INCLUDES ITEMS W/*
55	20293	LINKAGE, QP CONTROL ASSY.	1	..... INCLUDES ITEMS W/+
56	20280	BLOCK, CABLE ASSY.	1	..... INCLUDES ITEMS W/#
57		HANDLE ASSY., MAIN	1	..... NO LONGER AVAILABLE
58	21243	THROTTLE KIT	1	..... INCLUDES ITEMS W/$
59$	21171	THROTTLE, LEVER	1	
60>	21746	SPRING, THROTTLE	1	
61>	3233	WASHER, FENDER 1.5 O.D X 3/8 ID.	1	
62	20493	KIT, INSTALLATION ADJUSTABLE HANDLE	1	..... INCLUDES ITEMS W/>

QUICK PITCH HANDLE ASSY. (07/30/07 AND ABOVE)

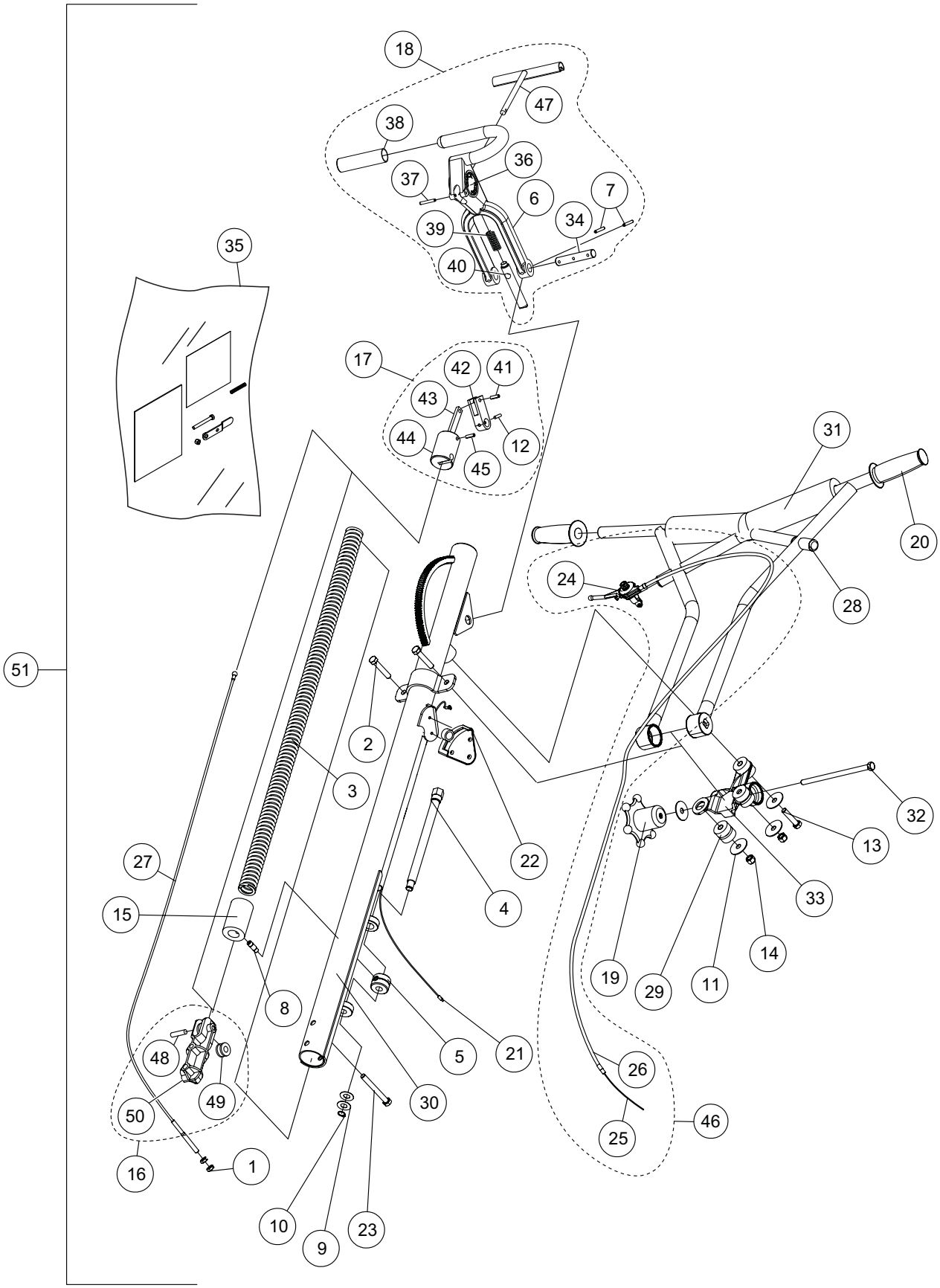

QUICK PITCH HANDLE ASSY. (07/30/07 AND ABOVE)

NO.	PART NO.	PART NAME	QTY.	REMARKS
1#	1116	NUT, BRASS JAM 5/16-18	2	
2#	1665	SCREW, HHC 3/8-16 X 2	2	
3#	1715	Q.P. SPRING CENTER BALANCE	1	
4#	1717	SCREW, QP TRIM ADJUSTMENT W/A	1	
5#	1718	NUT , QP TRIM CNTL ADJUSTMENT	1	
6#$	20389	HANDLE, QP	1	
7#$	1729	PIN, ROLL 3/16 X 1-1/4	2	
8#	1732	Q.P. ADJUSTMENT PIN	1	
9#	1733	WASHER, 1/2 X 1/32, AN960-816L	2	
10#	1737	RING, SNAP, TRUARC 5100-5	1	
11#	3233	WASHER, FENDER, 1.5OD X 3/8ID	4	
12#	4568	PIN, ROLL 3/16 X 1	1	
13#	9154	SCREW, HHC 3/8-16 X 1 3/4	1	
14#	10133	NUT, NYLOC 3/8-16	2	
15#	20270	QP ADJUSTMENT BLOCK	1	
16#	20280	BLOCK, PITCH CONTROL	1	INCLUDES ITEMS W/&
17#	20293	LINKAGE QP CONTROL	1	INCLUDES ITEMS W/@
18#	20390	TRIGGER, QP ASSEMBLY	1	INCLUDES ITEMS W/$
19#	20439	WHEEL ASSY. , HAND	1	
20#	20478	GRIP, HANDLE	2	
21#	20514	WIRE ASSY., KILL SWITCH	1	
22#	20856	SWITCH ASSY., KILL	1	
23#	21017	SCREW, HHC 3/8-16 X 3.25 FULL THRD GR5	1	
24#%	21171	THROTTLE, LEVER	1	
25#%	21172	CABLE, THROTTLE 68”	1	
26#%	21173	HOUSING, MAGURA THROTTLE CABLES	1	
27#	20297	CABLE ASM, LENGTH 45", JB, HD & QP	1	
28#	22055	HANDLE WA, VIBRATION CONTROL	1	
29#	22059	ISOLATOR, VIBRATION 80 DUROMETER SHORE A	3	
30#	22060	MAIN HANDLE WA,QUICK PITCH VIBE CONTROL	1	
31#	22166	COVER,VIBE CONTROL HANDLE PAD	1	
32#	22167	SCREW, HHC 3/8-16 X 6.5” GRADE 5	1	
33#	22206	CHASSIS, CAST VIBRATION ISOLATOR	1	REPLACES P/N 22056
34#$	1711	SHAFT, CONTROL Q.P.	1	
35#	22100	KIT, VIBE CONTROL HANDLE INSTALLATION	1	
36#$	12405	DECAL, WHITEMAN QUICK PITCH	2	
37#$	1729	PIN, ROLL 3/16 X 1-1/4	1	
38#$	1724	GRIP, HANDLE	1	
39#$	1706	SPRING, COMPRESSION	1	
40#$	20437	PIN, QP LATCH	1	
41#@	1731	PIN, ROLL 1/4 X 3/4	1	
42#@	20443	ARM, SLIDE CONTROL	1	
43#@	1709	QP DOGBONE	1	
44#@	20269	BLOCK, CABLE SLIDE	1	
45#@	20276	PIN, ROLL 1/4 X 1-3/4	1	
46#	21243	THROTTLE KIT	1	INCLUDES ITEMS W/%
47#$	A6581	TRIGGER, QP	1	
48#&	20279	PIN, SUPPORT BLOCK 3/8 X 1.59	1	
49#&	A1808	PULLEY, PITCH CABLE HANDLE	1	
50	20275	BLOCK, SUPPORT	1	
51	22061	HANDLE ASSY, HD QUICK PITCH VIBE CONTROL	1	INCLUDES ITEMS W/#

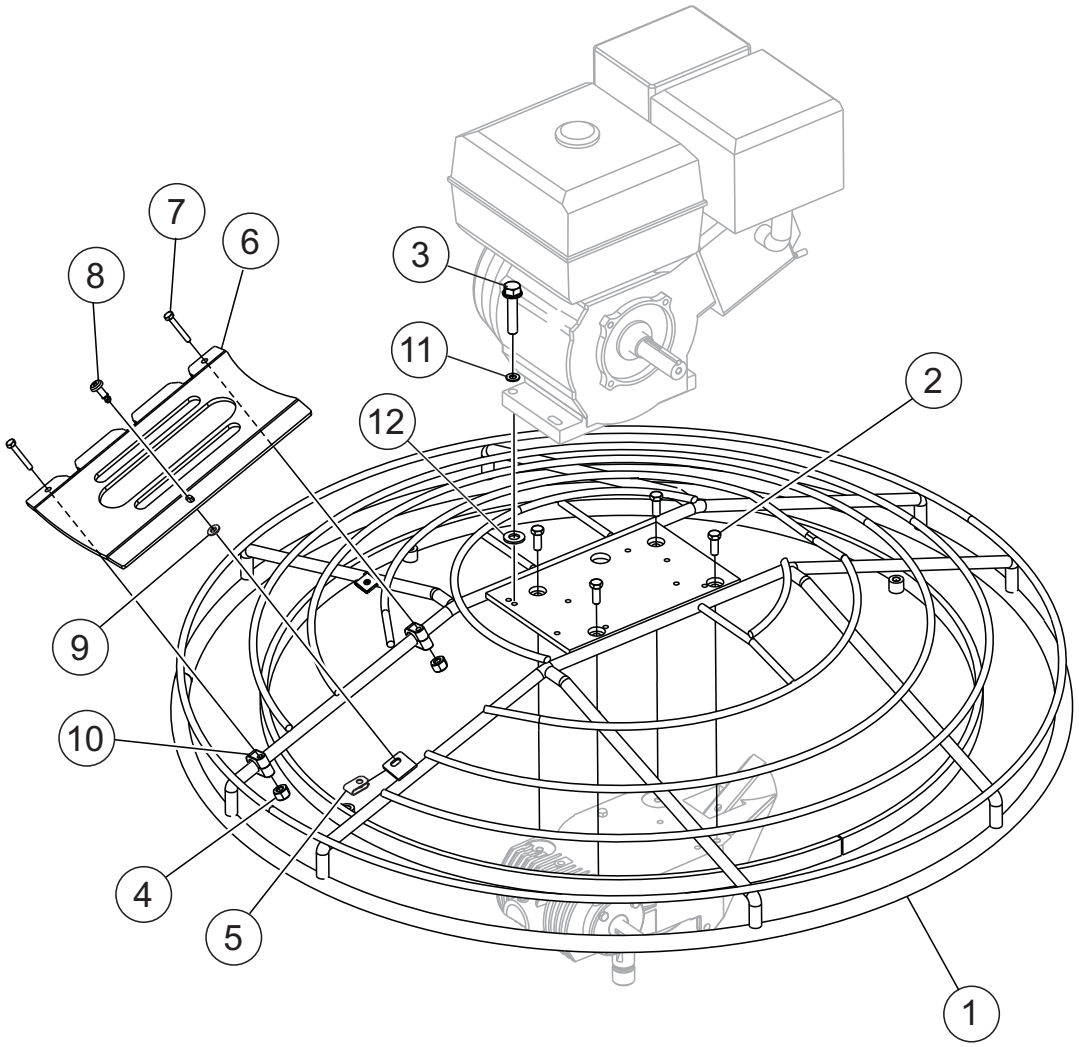
7
6
8
3
11
2
12
9
10
4
5
1

NO.	PART NO.	PART NAME	QTY.	REMARKS
1	21973	GUARD RING	1	
2	0205	SCREW, HHC 3/8-16 X 1.0	4	
3	1391	SCREW, HHC 5/16-24 X 1-1/2 ZINC	4	
4	10024	NUT, NYLOC 1/4-20	2	
5	21929	RECEPTACLE, QUARTER TURN	1	
6	21979	ACCESS PANEL, B FINISHER	1	
7	26250	SCREW, HHC 1/4 - 20 X 1-3/4	2	
8	21928	STUD, OVAL PHILLIPS RECESS	1	
9	21930	RETAINER CLIP, QUARTER TURN STUD	1	
10	21922	CLAMP, 0.625" ID PIPE	2	
11	933241	WASHER, FLAT SAE 5/16 GRD 9YZ	4	
12	13351	WASHER, FLAT 3/8 EXT THICK HIGH	4	HONDA UNITS ONLY

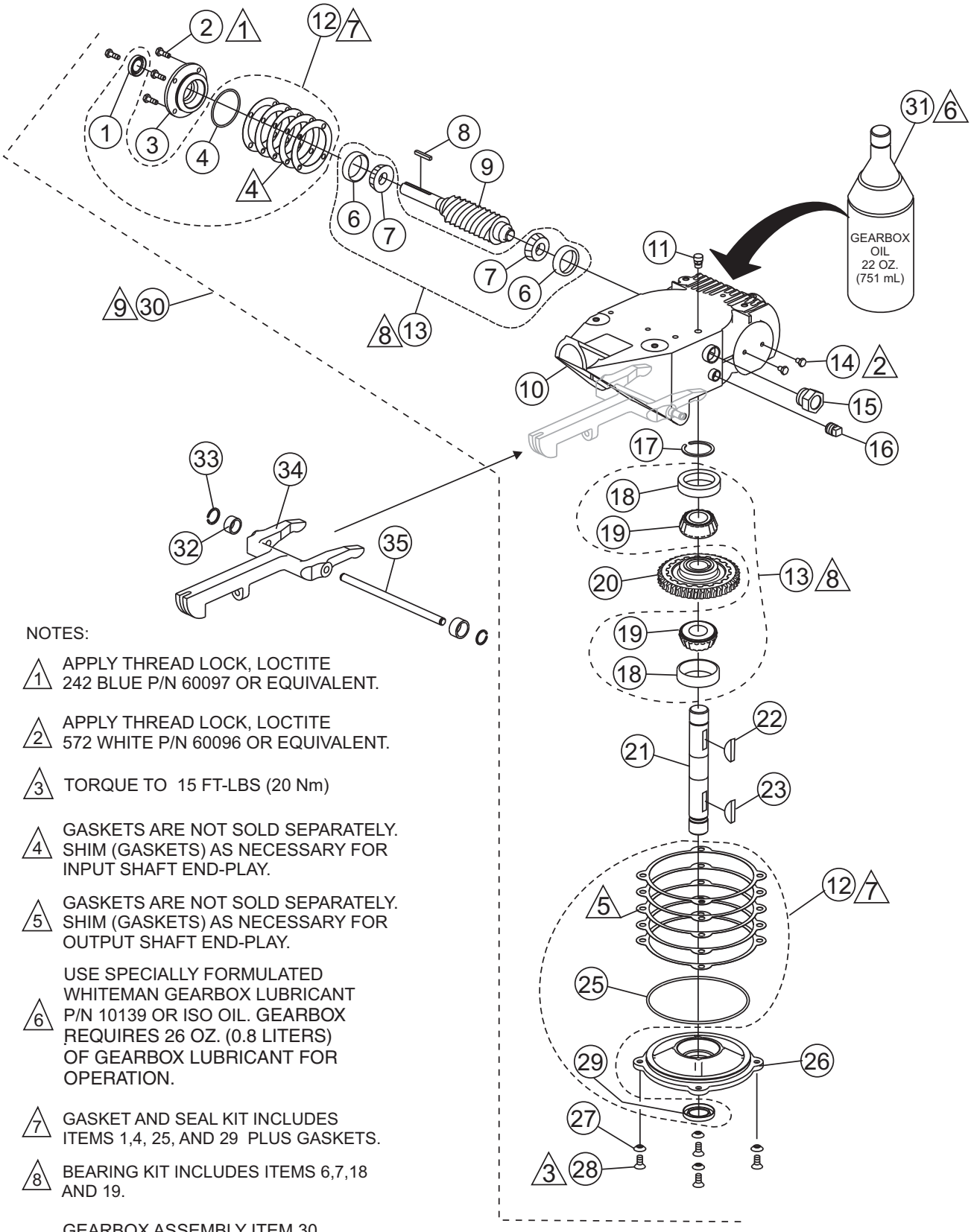

NOTES:

1. APPLY THREAD LOCK, LOCTITE 242 BLUE P/N 60097 OR EQUIVALENT.
2. APPLY THREAD LOCK, LOCTITE 572 WHITE P/N 60096 OR EQUIVALENT.
3. TORQUE TO 15 FT-LBS (20 Nm)
4. GASKETS ARE NOT SOLD SEPARATELY. SHIM (GASKETS) AS NECESSARY FOR INPUT SHAFT END-PLAY.
5. GASKETS ARE NOT SOLD SEPARATELY. SHIM (GASKETS) AS NECESSARY FOR OUTPUT SHAFT END-PLAY.
6. USE SPECIALLY FORMULATED WHITEMAN GEARBOX LUBRICANT P/N 10139 OR ISO OIL. GEARBOX REQUIRES 26 OZ. (0.8 LITERS) OF GEARBOX LUBRICANT FOR OPERATION.
7. GASKET AND SEAL KIT INCLUDES ITEMS 1,4, 25, AND 29 PLUS GASKETS.
8. BEARING KIT INCLUDES ITEMS 6,7,18 AND 19.
9. GEARBOX ASSEMBLY ITEM 30, INCLUDES ITEMS WITHIN DASHED LINE EXCEPT ITEMS 12,13 AND 31

NO.	PART NO.	PART NAME	QTY.	REMARKS
1%*	0753	SEAL, OIL	1	
2%	0131A	SCREW, HHC 1/4-20 X 3/4	4	
3%	12876	FLANGE, INPUT SHAFT	1	
4%*	20395	O-RING, 2" 8032 N	1	
6%#	20466	BEARING, CUP, TIMKEN #M11910	2	
7%#	20465	BEARING, CONE, TIMKEN #LM11949	2	
8%	0627	KEY, SQUARE 3/16 X 1-1/4	1	
9%	1851	GEAR, WORM "B" INPUT SHAFT	1	
10%	12874	CASE, WORM GEAR MACHINED	1	
11%	21218	VENT, AIR	1	
12	21046	GASKET/SEAL KIT	1	INCLUDES ITEMS W/ *
13	21047	BEARING KIT	1	INCLUDES ITEMS W/ #
14%	20476	SCREW, HHC 1/4-28 X 3/8	2	
15%	21033	SIGHT GLASS, 3/4 M PIPE STEEL	1	
16%	0121 A	FITTING, PLUG 3/8 MP SQ HEAD	1	
17%	1138	RING, SNAP, TRUARC 5100-112	1	
18%#	20475	BEARING, CUP TIMKEN #M86610	2	
19%#	20474	BEARING, CONE TIMKEN #M86647	2	
20%	1140	GEAR, WORM, COMPOSITE	1	
21%	20470	SHAFT, OUTPUT	1	
22%	1139	KEY, WOODRUFF #810	1	
23%	1238	KEY, WOODRUFF #25	1	
25%*	20396	O-RING, 254 BUNA N	1	
26%	12875	COVER, GEARBOX	1	
27%	10235	WASHER, C/S EXT. SHKP	4	
28%	20875	SCREW, FHSC 5/16-18 X 3/4	4	
29%*	0254	SEAL, OIL	1	
30	20407	GEARBOX ASSY.	1	INCLUDES ITEMS W/ %
31	10139	LUBE, GEARBOX OIL ISO 680, 22 OZ. (650 ML)	2	
32	2196	SPACER, 0.5 X 0.402 X .25L	2	
33	20802	RING, SNAP TRUARC 5100-37	2	
34	1150	YOKE ARM	1	
35	20801	PIN, YOKE	1	

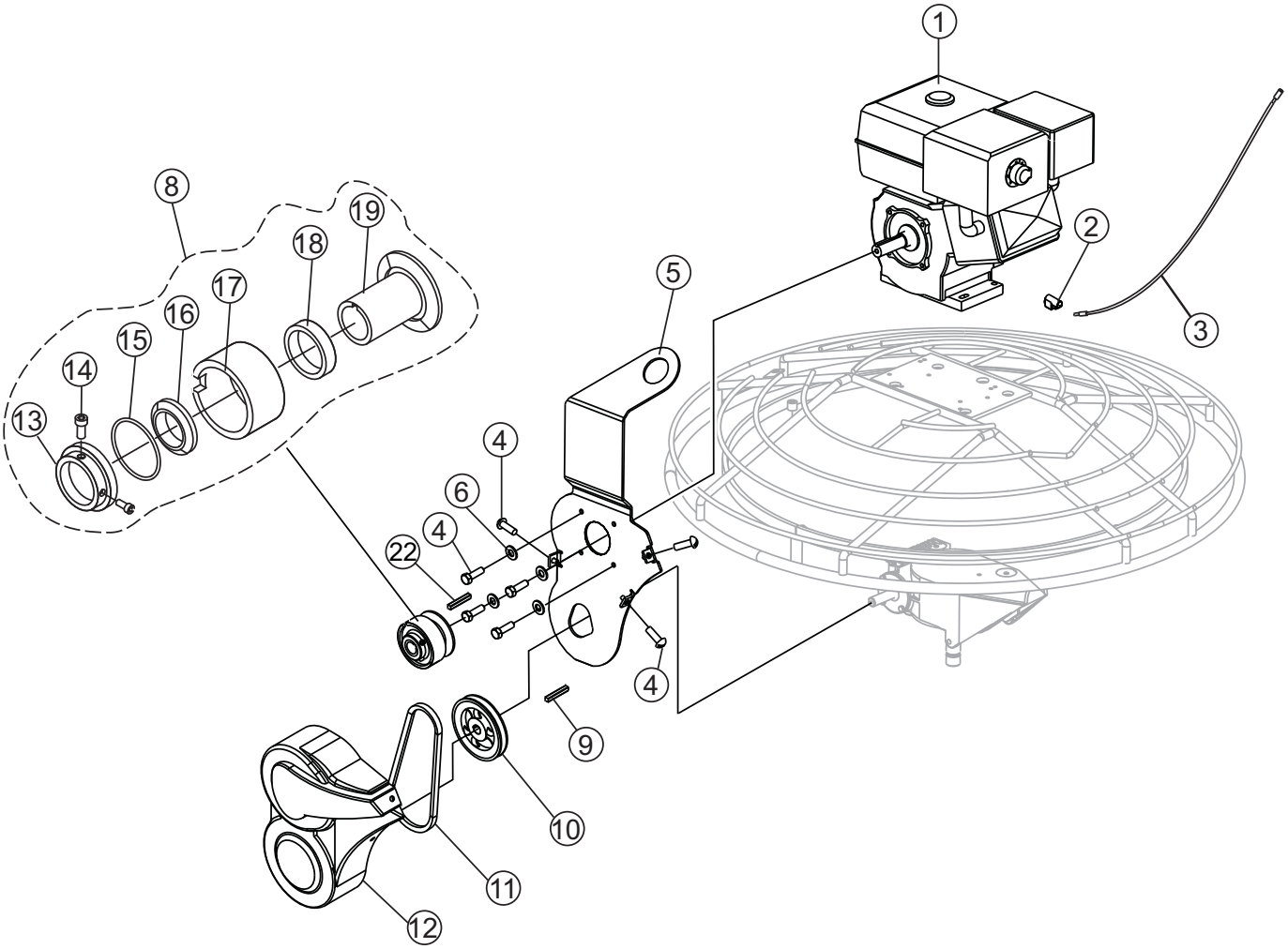
1
2
3
4
4
4
5
6
8
9
10
11
12
13
14
15
16
17
18
19
22

NO.	PART NO.	PART NAME	QTY.	REMARKS
1	21980	ENGINE, HONDA GX270UTQA2	1	B46H90 FINISHER
1	21669	ENGINE, ROBIN EX270D50020	1	B46R90 FINISHER
1	1388	ENGINE, HONDA GX340U1QAP2	1	B46H11/B46H11H FINISHER
2	1475	CONNECTOR, SPLICE TAP	1	
3	1488	WIRE, SAFETY SWITCH	1	
4	12287	SCREW, THP 1/4- 20 X 3/4 SS	6	
5	21984	LIFTING BALE ASSEMBLY B FIN	1	
6	933241	WASHER, FLAT SAE 5/16 GRD 9 YZ	4	
8	0250	CLUTCH ASSEMBLY 1" CENTRIFUGAL	1	INCLUDES ITEMS W/ #
9	0627	KEY, SQ 3/16 X 1-1/4	1	
10@	21140	PULLEY AK-54 X 3/4	1	
10	11049	PULLEY AK-49 X 3/4, (HIGH SPEED)	1	B46H11H FINISHER ONLY
11@	0152 3	V-BELT A28	1	
11	1243	V-BELT A27, (HIGH SPEED)	1	B46H11H FINISHER ONLY
12	21970	BELT GUARD	1	
13#	0253	CLUTCH PLATE	1	
14#	1868	SCREW, SHS 3/8-24 X 3/4, NP	2	
15#	0855	SPRING, CLUTCH .156 X 5.375 X .025	1	
16#	B1766	WEIGHT, AUTOMATIC CLUTCH	4	
17#	0251	DRUM, CENTRIFUGAL CLUTCH	1	
18#	0456	BEARING, SHIELDED 6007 ZZ E	1	
19#	0252	CLUTCH SPINDLE, 1" BORE	1	
20@	1477	LOCTITE™ #242, BLUE	1	
21	22587	LOW SPEED KIT	1	INCLUDES ITEMS W/@
				B46H11H FINISHER ONLY
22	0310	KEY, 1/4" SQ X 1-1/2"	1	B46H90 FINISHER ONLY

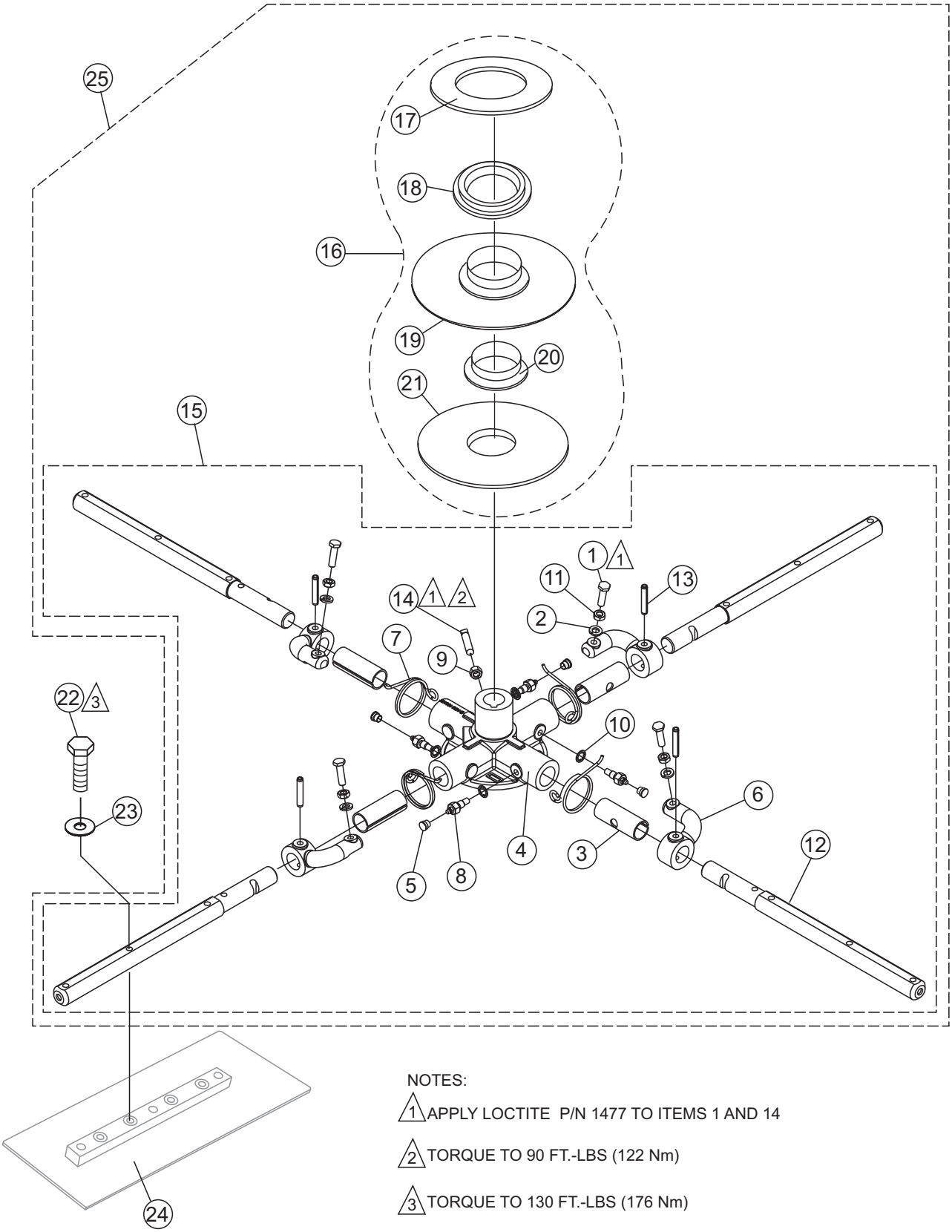

NOTES:

1 APPLY LOCTITE P/N 1477 TO ITEMS 1 AND 14

2 TORQUE TO 90 FT.-LBS (122 Nm)

3 TORQUE TO 130 FT.-LBS (176 Nm)

NO.	PART NO.	PART NAME	QTY.	REMARKS
1%+	0164 B	RADIUS HEAD 3/8-16, FULL THREAD	4	
2%+	0166 A	LOCK WASHER 3/8 MED	4	
3%+	1157 A	BUSHING, TROWEL ARM	4	
4%+	1161	SPIDER PLATE	1	
5%+	1162 A	CAP, GREASE ZERK #2 YELLOW	4	
6%+	1163	LEVER, TROWEL ARM RIGHT HAND	4	
7%+	1316	SPRING, LS ARM RETURN	4	
8%+	1322	RETAINING SCREW ASSY.	4	
9%+	1456	NUT, HEX FINISH 3/8-16	1	
10%+	1875	WASHER, INT. SHKP. 3/8”	4	
11%+	1876	NUT, HEX JAM 3/8 - 16 CLASS 2B	4	
12%+	2827	ARM, B FINISHER, EXTENDED	4	
13%+	4164	ROLL PIN 5/16 x 1-3/4”	4	
14%+	12097	SCREW, SQHS 3/8 - 16 X 1-3/4 CONE GRD 8 PLTD	1	
15+	7275	SPIDER PLATE ASSY.,	1	INCLUDES ITEMS W/%
				REPLACES P/N 149
16+	10968	THRUST BEARING KIT	1	INCLUDES ITEMS W/@
17@+	12208	WEAR RING	1	
18@+	12778	FLANGE BEARING	1	
19@+	10793	THRUST COLLAR	1	INCLUDES ITEMS W/#
20@#+	1471	THRUST COLLAR BUSHING	1	
21@+	1154 A	WEAR PLATE	1	
22	1207	SCREW, HHCS 5/16-18 X 1-3/4"	12	
23	0161 C	WASHER, LOCK 5/16"	12	
24		BLADE ASSEMBLY	4	CONTACT MQ UNIT SALES DEPT.
25	7275	SPIDER ASSY.	1	INCLUDES ITEMS W/+

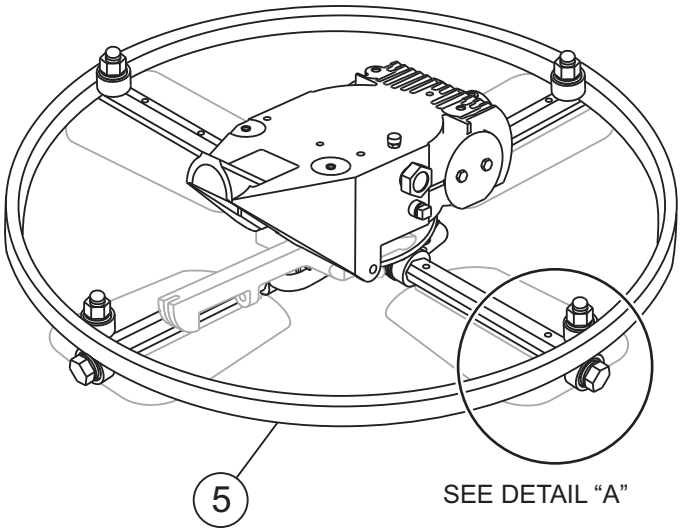

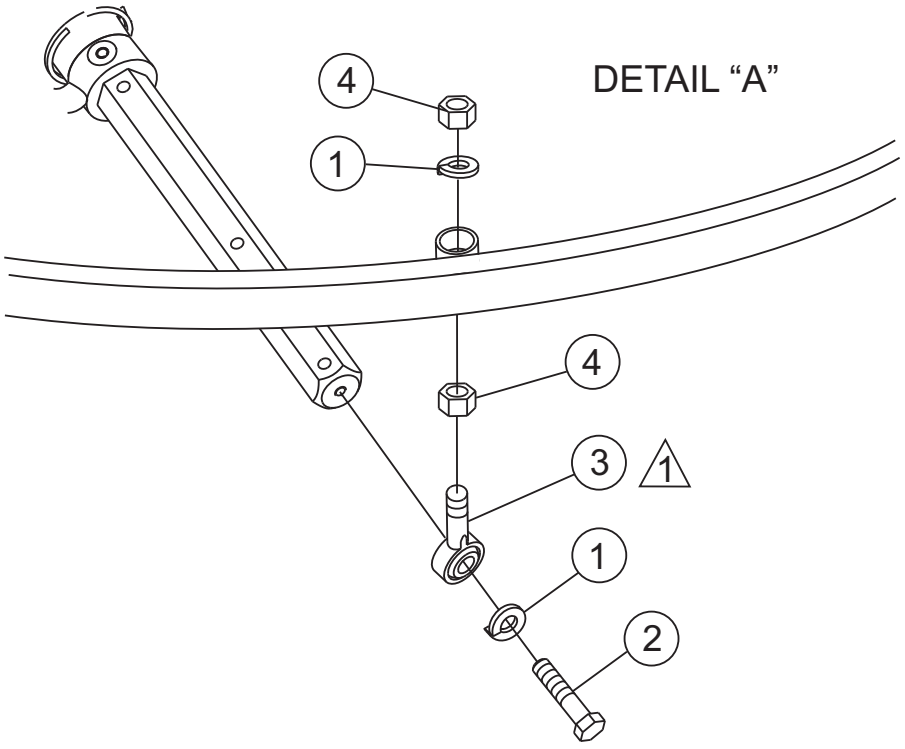

1 APPLY LOCTITE 242 BLUE OR EQUIVALENT.

STABILIZER RING ASSY.

NO	PART NO	PART NAME	QTY.	REMARKS
1	0161C	WASHER, LOCK, 5/16 MED	4	
2	1237	SCREW, SCH 5/16-18 X 7/8, NYL, NP	4	
3	1723	ROD END, 5/16-24 MALE	4	
4	6014C	NUT, HEX FINISH 5/16-24	8	
5	1483	RING, STABILIZER, 16-1/2" ARM	1	4-BLADE MODEL, REPLACES P/N 1235

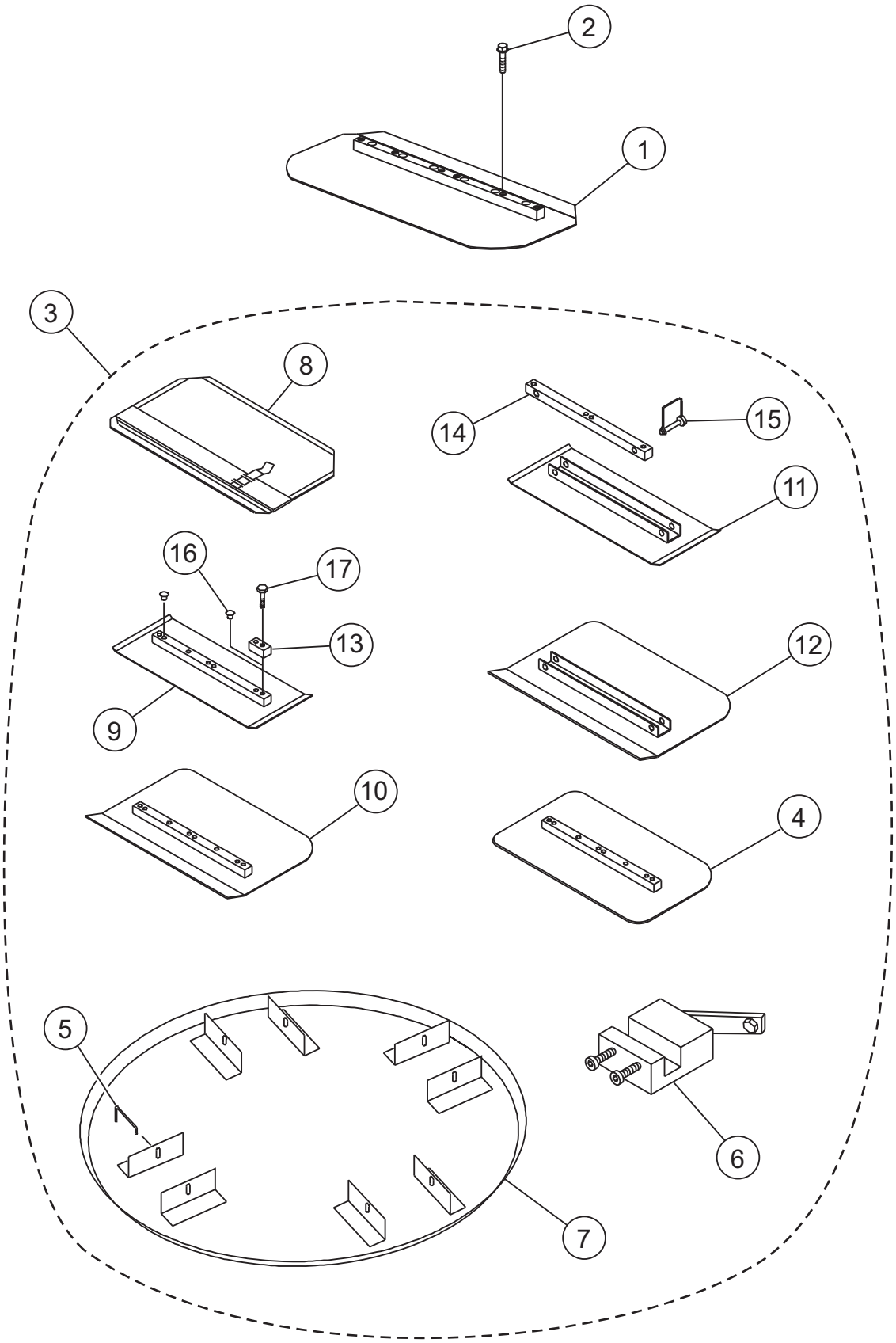
2
1
3
8
14
15
11
16
17
13
12
9
10
4
5
6
7

NO.	PART NO.	PART NAME	QTY.	REMARKS
1	0464	TROWEL BLADE, 8 X 18 STANDARD BC	4	
2	21906	SCREW, HHFS 5/16 - 18 X 1-1/2 GR5	8	
3		BLADE AND PAN ACCESSORIES, ALL		CONTACT UNIT SALES DEPT./ACC. ITEM
4		REVERSIBLE COMBO BLADE	4	CONTACT UNIT SALES DEPT./ACC. ITEM
5		FLOAT DISC LATCH PIN	4	CONTACT UNIT SALES DEPT./ACC. ITEM
6		TROWEL ARM ADJ. FIXTURE ASM	1	CONTACT UNIT SALES DEPT./ACC. ITEM
7		FLOAT DISC	1	CONTACT UNIT SALES DEPT./ACC. ITEM
8		FLOAT BLADE	4	CONTACT UNIT SALES DEPT./ACC. ITEM
9		FINISH BLADE	4	CONTACT UNIT SALES DEPT./ACC. ITEM
9		ENDURO FINISH BLADE W/ROTATING	4	CONTACT UNIT SALES DEPT./ACC. ITEM
10		COMBO FLOAT &FINISH BLADE	4	CONTACT UNIT SALES DEPT./ACC. ITEM
10		ENDURO COMBO FLOAT &FINISH BLADE	4	CONTACT UNIT SALES DEPT./ACC. ITEM
11		UNIVERSAL FINISH BLADE	4	CONTACT UNIT SALES DEPT./ACC. ITEM
11		ENDURO UNIVERSAL FINISH BLADE	4	CONTACT UNIT SALES DEPT./ACC. ITEM
12		UNIVERSAL COMBO BLADE	4	CONTACT UNIT SALES DEPT./ACC. ITEM
12		ENDURO UNIVERSAL COMBO BLADE	4	CONTACT UNIT SALES DEPT./ACC. ITEM
13	0201	GUARD RING LUG RING	4	
14		UNIVERSAL MOUNTING BAR	4	CONTACT UNIT SALES DEPT./ACC. ITEM
15		SNAP PIN 1/4"X1-3/4"	8	CONTACT UNIT SALES DEPT./ACC. ITEM
16	1434	TROWEL LUG (FINISH BLADE ONLY)	4	
17	0202	HHCS 5/16-18X1" RING	4	

TERMS AND CONDITIONS OF SALE — PARTS

PAYMENT TERMS

Terms of payment for parts are net 30 days.

FREIGHT POLICY

All parts orders will be shipped collect or prepaid with the charges added to the invoice. All shipments are F.O.B. point of origin. Multiquip's responsibility ceases when a signed manifest has been obtained from the carrier, and any claim for shortage or damage must be settled between the consignee and the carrier.

MINIMUM ORDER

The minimum charge for orders from Multiquip is $15.00 net. Customers will be asked for instructions regarding handling of orders not meeting this requirement.

RETURNED GOODS POLICY

Return shipments will be accepted and credit will be allowed, subject to the following provisions:

1. A Returned Material Authorization must be approved by Multiquip prior to shipment.
2. To obtain a Return Material Authorization, a list must be provided to Multiquip Parts Sales that defines item numbers, quantities, and descriptions of the items to be returned.
    a. The parts numbers and descriptions must match the current parts price list.
    b. The list must be typed or computer generated.
    c. The list must state the reason(s) for the return.
    d. The list must reference the sales order(s) or invoice(s) under which the items were originally purchased.
    e. The list must include the name and phone number of the person requesting the RMA.
3. A copy of the Return Material Authorization must accompany the return shipment.
4. Freight is at the sender's expense. All parts must be returned freight prepaid to Multiquip's designated receiving point.
5. Parts must be in new and resalable condition, in the original Multiquip package (if any), and with Multiquip part numbers clearly marked.
6. The following items are not returnable:
    a. Obsolete parts. (If an item is in the price book and shows as being replaced by another item, it is obsolete.)
    b. Any parts with a limited shelf life (such as gaskets, seals, "O" rings, and other rubber parts) that were purchased more than six months prior to the return date.
    c. Any line item with an extended dealer net price of less than $5.00.
    d. Special order items.
    e. Electrical components.
    f. Paint, chemicals, and lubricants.
    g. Decals and paper products.
    h. Items purchased in kits.
7. The sender will be notified of any material received that is not acceptable.
8. Such material will be held for five working days from notification, pending instructions. If a reply is not received within five days, the material will be returned to the sender at his expense.
9. Credit on returned parts will be issued at dealer net price at time of the original purchase, less a 15% restocking charge.
10. In cases where an item is accepted, for which the original purchase document can not be determined, the price will be based on the list price that was effective twelve months prior to the RMA date.
11. Credit issued will be applied to future purchases only.

PRICING AND REBATES

Prices are subject to change without prior notice. Price changes are effective on a specific date and all orders received on or after that date will be billed at the revised price. Rebates for price declines and added charges for price increases will not be made for stock on hand at the time of any price change.

Multiquip reserves the right to quote and sell direct to Government agencies, and to Original Equipment Manufacturer accounts who use our products as integral parts of their own products.

SPECIAL EXPEDITING SERVICE

A $35.00 surcharge will be added to the invoice for special handling including bus shipments, insured parcel post or in cases where Multiquip must personally deliver the parts to the carrier.

LIMITATIONS OF SELLER'S LIABILITY

Multiquip shall not be liable hereunder for damages in excess of the purchase price of the item with respect to which damages are claimed, and in no event shall Multiquip be liable for loss of profit or good will or for any other special, consequential or incidental damages.

LIMITATION OF WARRANTIES

No warranties, express or implied, are made in connection with the sale of parts or trade accessories nor as to any engine not manufactured by Multiquip. Such warranties made in connection with the sale of new, complete units are made exclusively by a statement of warranty packaged with such units, and Multiquip neither assumes nor authorizes any person to assume for it any other obligation or liability whatever in connection with the sale of its products. Apart from such written statement of warranty, there are no warranties, express, implied or statutory, which extend beyond the description of the products on the face hereof.

Effective: February 22, 2006

OPERATION AND PARTS MANUAL

HERE'S HOW TO GET HELP

PLEASE HAVE THE MODEL AND SERIAL NUMBER ON-HAND WHEN CALLING

UNITED STATES

Multiquip Corporate Office

18910 Wilmington Ave.
Carson, CA 90746
Contact: mq@multiquip.com

Tel. (800) 421-1244
Fax (800) 537-3927

MQ Parts Department

800-427-1244
310-537-3700

Fax: 800-672-7877
Fax: 310-637-3284

Service Department

800-421-1244
310-537-3700

Fax: 310-537-4259

Warranty Department

800-421-1244
310-537-3700

Fax: 310-943-2249

Technical Assistance

800-478-1244

Fax: 310-943-2238

MEXICO

MQ Cipsa

Carr. Fed. Mexico-Puebla KM 126.5
Momoxpan, Cholula, Puebla 72760 Mexico
Contact: pmastretta@cipsa.com.mx

Tel: (52) 222-225-9900
Fax: (52) 222-285-0420

UNITED KINGDOM

Multiquip (UK) Limited Head Office

Unit 2, Northpoint Industrial Estate,
Globe Lane,
Dukinfield, Cheshire SK16 4UJ
Contact: sales@multiquip.co.uk

Tel: 0161 339 2223
Fax: 0161 339 3226

CANADA

Multiquip

4110 Industriel Boul.
Laval, Quebec, Canada H7L 6V3
Contact: jmartin@multiquip.com

Tel: (450) 625-2244
Tel: (877) 963-4411
Fax: (450) 625-8664

© COPYRIGHT 2012, MULTIQUIP INC.

Multiquip Inc, the MQ logo and the Whiteman logo are registered trademarks of Multiquip Inc. and may not be used, reproduced, or altered without written permission. All other trademarks are the property of their respective owners and used with permission.

This manual MUST accompany the equipment at all times. This manual is considered a permanent part of the equipment and should remain with the unit if resold.

The information and specifications included in this publication were in effect at the time of approval for printing. Illustrations, descriptions, references and technical data contained in this manual are for guidance only and may not be considered as binding. Multiquip Inc. reserves the right to discontinue or change specifications, design or the information published in this publication at any time without notice and without incurring any obligations.

Your Local Dealer is:

MULTIQUIP®